REEEA Attachment 1: Description of the Technology and Complete Facility

Generation and Transmission Details:

- Type of plant: Solar Photovoltaic Nameplate capacity rating: 37.5MWdc, 30.0 MWac
- Annual net output: 74,580 MWh
- Projected capacity factor: 28.77% (Net Capacity)
- In-service date: 12/31/2012
- Transmission: Project will own an on-site transformer to step-up to 69kV and will then inject directly into PabCo Substation for delivery to NV Energy
- Major equipment providers: 280W modules and 1000 kW inverters – manufacturers to be determined
- Configuration: The system will consist of 134,000 polycrystalline modules, each with an average name plate rating of 280 W. This array will then be connected to thirty (30) 1000 kW inverters with a CEC efficiency of 97.5%. All modules we be mounted on horizontal single axis trackers.

Point of Ownership Change Diagram:

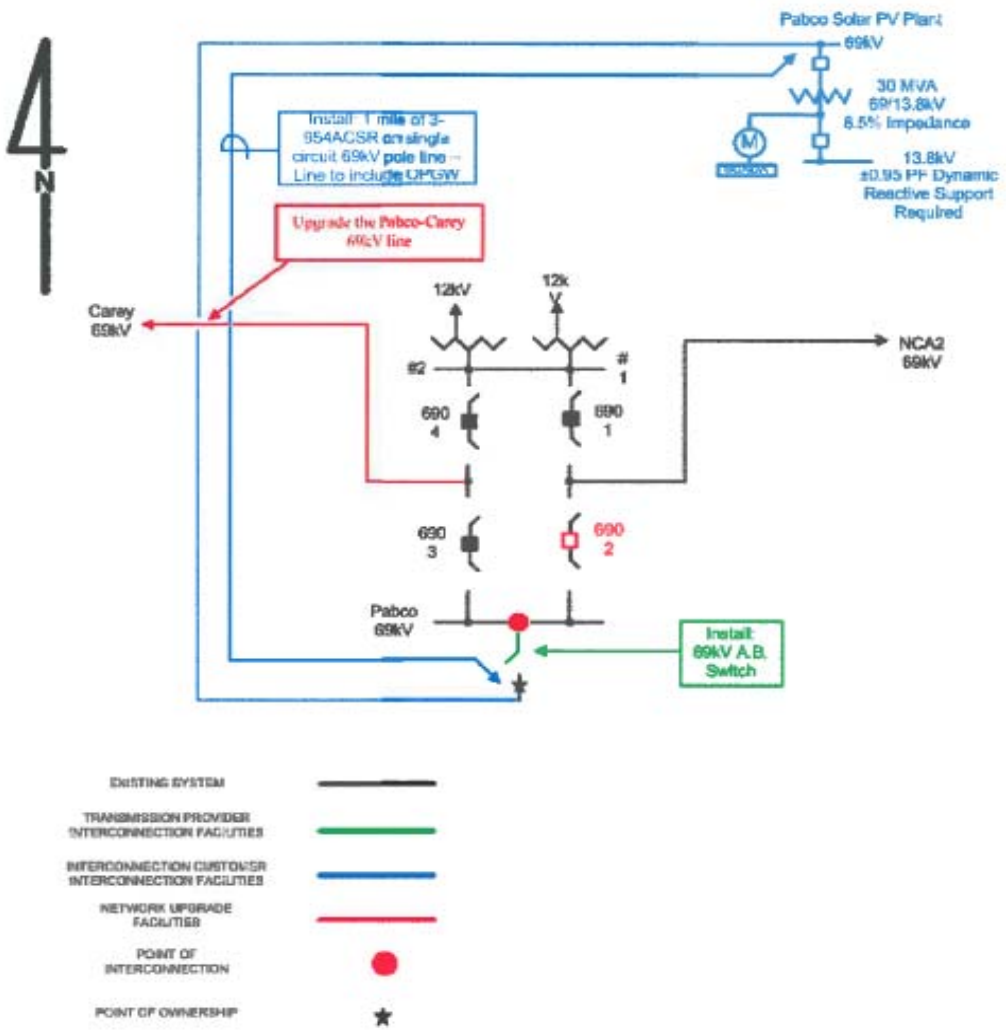

SunEdison
44 Montgomery St., Ste 2200
San Francisco, CA 94104

866 SunEdison (786 3347)
T +1 415 229 8862
F +1 415 229 8811

info@sunedison.com
www.sunedison.com

REEEA Attachment 2: Complete and legal description

Regional Facility Map with location, county boundaries, state boundaries:

Clark County Boundaries:

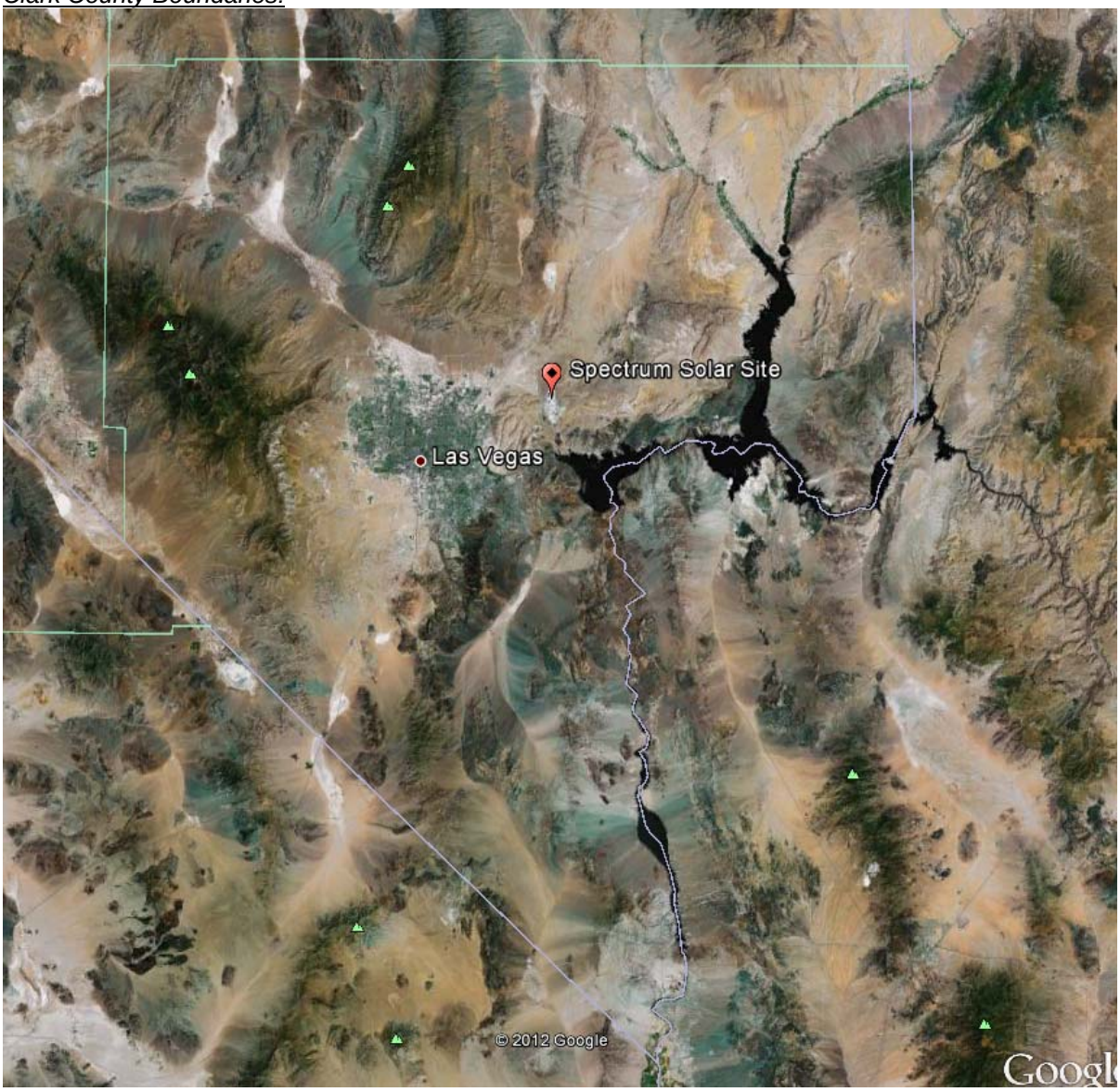

SunEdison
44 Montgomery St., Ste 2200
San Francisco, CA 94104

866 SunEdison (786 3347)
T +1 415 229 8862
F +1 415 229 8811

info@sunedison.com
www.sunedison.com

Nevada State Boundaries:

Legal Description: (excerpted from Site Lease)

PARCEL 2:

Canyon Placer, Canyon No. 1 Placer, Canyon No. 2 Placer, Canyon No. 3 Placer, Canyon No. 2A and Hercules No. 2 Placer Mining Claims, situated in Clark County, Nevada described as follows:

The Canyon Placer Claim, comprising of Lots Five (5) and Six (6) and the East Half (E ½) of the Northwest Quarter (NW ¼) of Section 7, Township 20 South, Range 64 East, M.DB. & M. The Canyon No. 1 Placer Claim, comprising the Lots Seven (7) and Eight (8) and the East One Half (E ½) of the Southwest Quarter (SW ¼) of said Section 7; the Canyon No. 2 Placer Claim, comprising the Lots Five (5) and Six (6) and the East Half (E ½) of the Northwest Quarter (NW ¼) of Section 18, said Township and Range; the Canyon No. 3 Placer Claim, comprising the Lots Seven (7) and Eight (8) and the East Half (E ½) of the Southwest Quarter (SW ¼) of said Section 18; the Canyon No. 2A Claim comprising the Lots Thirteen (13) and Fourteen (14) and the East Half (E ½) of the Southwest Quarter (SW ¼) of Section 6, said Township and Range and the Hercules No. 2 Claim comprising the Lots Five (5) and Six (6) and the East Half (E ½) of the Northwest Quarter (NW ¼) of Section 19, said Township and Range.

PARCEL 3:

Canyon No. 3A, Canyon No. 4A, Canyon No. 1A, Canyon A, Emperor No. 1A, Emperor A, Canyon No. 4, Canyon No. 5, Canyon No. 5A, Canyon No. 6A, Hercules A, Hercules No. 2A, Hercules, Blarney A and Blarney No. 1A Placer Mining Claims, situate in Clark County, Nevada, described as follows:

The Canyon No. 3A claim comprising the South Half (S ½) of the Northeast Quarter (NE ¼), the South Half (S ½) of the Northwest Quarter (NW ¼) of the Northeast Quarter (NE ¼) and Lots Eight (8) and Fifteen (15) of Section 6 in Township 20 South, Range 64 East of the M.D.M.; the Canyon No. 4A Claim comprising the Southeast Quarter (SE ¼) of the Northwest Quarter (NW ¼), the South Half (S ½) of the Northeast Quarter (NE ¼) of the Northwest Quarter (NW ¼) and Lots Eleven (11), Twelve (12) and Eighteen (18) of said Section 6; thence Canyon No. 1A Claim comprising the Southeast Quarter (SE ¼) of said Section 6; the Canyon A Claim comprising the Northeast Quarter (NE ¼) of Section 7, said Township and Range; the Emperor No. 1A Claim comprising the Southeast Quarter (SE ¼) of said Section 7; the Emperor A Claim comprising the Southwest Quarter (SW ¼) of Section 8, said Township and Range; the Canyon No. 4 Claim comprising the Northeast Quarter (NE ¼) of Section 18, said Township and Range; the Canyon No. 5 Claim comprising the Southeast Quarter (SE ¼) of said Section 18; the Canyon No. 5A Claim comprising the Northwest Quarter (NW ¼) of Section 17, said Township and Range; the Canyon No. 6A Claim comprising the Southwest Quarter (SW ¼) of said Section 17; the Hercules A Claim comprising the Southeast Quarter (SE ¼) of said Section 17; the Hercules No. 2 Claim comprising the Northeast Quarter (NE ¼) of said Section 17; the Hercules Claim comprising the Northeast Quarter (NE ¼) of Section 19, said Township and Range; the Blarney A Claim comprising the Northwest Quarter (NW ¼) of Section 20, said Township and Range; and the Blarney No 1A Claim comprising the North Half (N ½) of the Northeast Quarter (NE ¼) of said Section 20, said Township and Range.

REEEA Attachment 3: Description of Natural or Non-renewable resources that will be affected

Areas of Mitigation, controversy, issue or concern:

The Spectrum project is located on 311 acres of private land currently zoned for heavy industrial use. It is subject to the Clark County Multiple Species Habitat Conservation Program (MSHCP), which provides for extensive and highly regulated mitigation measures to offset any potential disturbance to protected flora and fauna, including the desert tortoise. The project will pay a per acre mitigation fee to fund the MSHCP and related mitigation measures. Further, FRV has agreed to allow Nevada Division of Forestry to access the site prior to construction so that they may harvest seeds of any onsite vegetation of interest, even though the project is not required to provide such an opportunity. FRV cares deeply about the natural resources on southern Nevada and will take all required precautions to minimize impact to habitat and species.

REEEA Attachment 4: Summary of the PUC and FERC Dockets

Summary of PUC Dockets:
All Dockets, including Exhibits, Service List and Final Order can be located in the public domain through the Nevada Public Utilities Commission through (http://pucweb1.state.nv.us/pucn/DktInfo.aspx?Util=Electric) and a search for Docket #11-03014. This docket sets forth the PUCN's approval of the 25-year Spectrum solar PPA with Nevada Power Company.

Docket Number	Filing Date	Doc Type	Notes	Pages
11-03014	02-02-12	ORDER	Second Modified Final Order	63
11-03014	02-02-12	SERVICE LIST	Second Modified Final Order	6
11-03014	06-16-11	EXHIBIT	Confidential List	1
11-03014	06-16-11	EXHIBIT	List	5
11-03014	01-10-12	EXHIBIT	85	3
11-03014	01-10-12	EXHIBIT	84	2
11-03014	01-10-12	EXHIBIT	83	15
11-03014	01-10-12	EXHIBIT	82	6
11-03014	01-10-12	EXHIBIT	81	5
11-03014	01-10-12	EXHIBIT	80	61
11-03014	01-10-12	EXHIBIT	79	7
11-03014	01-10-12	EXHIBIT	78	31
11-03014	01-10-12	EXHIBIT	77	7
11-03014	01-10-12	EXHIBIT	76	50
11-03014	01-10-12	EXHIBIT	75	8
11-03014	01-10-12	EXHIBIT	74	13
11-03014	01-09-12	EXHIBIT	73	11
11-03014	01-09-12	EXHIBIT	72	6
11-03014	01-09-12	EXHIBIT	71	12
11-03014	01-09-12	EXHIBIT	70	18
11-03014	01-09-12	EXHIBIT	69	2
11-03014	01-09-12	EXHIBIT	68	18
11-03014	01-09-12	EXHIBIT	67	77
11-03014	01-09-12	EXHIBIT	66	11

Summary of FERC Dockets: Not Applicable
No FERC filings have started.

REEEA Attachment 5: Copy of the Business Plan for the Nevada Facility

The 37.5MWdc FRV Spectrum Solar generating facility will generate approximately 75,000MWhs per year of clean, renewable solar power and renewable energy benefits that will be sold to Nevada Power Company under a 25-year Power Purchase Agreement (PPA) which has been fully executed by the parties and fully approved by the Public Utilities Commission of Nevada. Please find a copy of the PPA with Nevada Power Company attached.

The project will lease 311 acres of private property in unincorporated Clark County, Nevada and will interconnect at 69kV to an existing substation located approximately 1 mile south of the project site.

The project is being designed and engineered by SunEdison (the parent company), and will be built by third party contractor. The project is expected to start construction in June 2012 and reach completion in December 2012.

LONG-TERM
PORTFOLIO ENERGY CREDIT AND RENEWABLE POWER PURCHASE AGREEMENT

BETWEEN

NEVADA POWER COMPANY

AND

FRV SPECTRUM SOLAR, LLC

_____, 2011

TABLE OF CONTENTS

ARTICLE PAGE

1. DEFINITIONS 1
2. TERM; TERMINATION AND SURVIVAL OF OBLIGATIONS 16
3. SUPPLY SERVICE OBLIGATIONS 17
4. PRICE OF PRODUCT 27
5. PORTFOLIO ENERGY CREDITS/RENEWABLE ENERGY BENEFITS 28
6. RIGHT OF FIRST OFFER 30
7. METERING, INVOICING AND PAYMENTS 31
8. FACILITY CONSTRUCTION; OPERATIONS AND MODIFICATIONS 34
9. EMERGENCY AND CURTAILMENT 40
10. PLANNED OUTAGES 42
11. REPORTS; OPERATIONAL LOG 43
12. COMMUNICATIONS 45
13. SCHEDULING NOTIFICATION 45
14. COMPLIANCE 46
15. APPROVALS 47
16. SECURITY 48
17. INDEMNIFICATION 50
18. LIMITATION OF LIABILITY 51
19. FORCE MAJEURE 52
20. DISPUTES 54
21. NATURE OF OBLIGATIONS 54
22. ASSIGNMENT 55
23. DEFAULT AND REMEDIES 59
24. REPRESENTATIONS AND WARRANTIES OF SUPPLIER 61
25. REPRESENTATIONS AND WARRANTIES OF BUYER 62
26. INSURANCE 63
27. NO EXPECTATION OF CONFIDENTIALITY; PUBLIC STATEMENTS 65
28. MISCELLANEOUS 66

EXHIBITS

EXHIBIT 1	DESCRIPTION OF GENERATING FACILITY	1-1
EXHIBIT 2A	PRODUCT RATES	2A-1
EXHIBIT 2B	FORM OF MONTHLY ENERGY INVOICE	2B-1
EXHIBIT 2C	FORM OF PC REPLACEMENT INVOICE	2C-1
EXHIBIT 3A	DESCRIPTION OF PROJECT SITE	3A-1
EXHIBIT 3B	MAP DEPICTING PROJECT SITE	3B-1
EXHIBIT 4	NOTICES, BILLING AND PAYMENT INSTRUCTIONS	4-1
EXHIBIT 5	ONE-LINE DIAGRAM OF GENERATING FACILITY AND INTERCONNECTION FACILITIES	5-1
EXHIBIT 6	PROJECT MILESTONE SCHEDULE	6-1
EXHIBIT 7	PERFORMANCE TESTS	7-1
EXHIBIT 8	FORM OF AVAILABILITY NOTICE	8-1
EXHIBIT 9	BUYER'S REQUIRED REGULATORY APPROVALS	9-1
EXHIBIT 10	SUPPLIER'S REQUIRED REGULATORY APPROVALS	10-1
EXHIBIT 11	SUPPLIER'S REQUIRED PERMITS FOR CONSTRUCTION AND OPERATION	11-1
EXHIBIT 12	SUPPLIER'S REQUIRED AGREEMENTS	12-1
EXHIBIT 13	SUPPLY AMOUNT	13-1
EXHIBIT 14	DIAGRAM OF GENERATING FACILITY	14-1
EXHIBIT 15	OPERATION AND MAINTENANCE AGREEMENT; OPERATOR GOOD STANDING CERTIFICATE	15-1
EXHIBIT 16	GROUND LEASE; RIGHTS-OF-WAY	16-1
EXHIBIT 17	FORM OF LETTER OF CREDIT	17-1
EXHIBIT 18	YEARLY PC AMOUNT	18-1

LONG-TERM PORTFOLIO ENERGY CREDIT AND RENEWABLE POWER PURCHASE AGREEMENT

This Long-Term Portfolio Energy Credit and Renewable Power Purchase Agreement is made and entered into as of _____ ___, 2011 (the "Effective Date") by and between **NEVADA POWER COMPANY,** a Nevada corporation, d/b/a NV Energy ("Buyer"), and FRV Spectrum Solar, LLC, a Delaware limited liability company ("Supplier"). Buyer and Supplier are referred to individually as a "Party" and collectively as the "Parties."

WHEREAS, Buyer is an operating electric public utility, subject to the applicable rules and regulations of the PUCN, and the FERC;

WHEREAS, pursuant to the Renewable Energy Law, Buyer is entitled to use Portfolio Energy Credits to comply with the Portfolio Standard as determined by the PUCN;

WHEREAS, Supplier desires to build the Generating Facility, which is a solar photovoltaic power plant located in Clark County, Nevada, and which Supplier desires to designate as a Renewable Energy System with the PUCN in order to comply with the requirements of this Agreement;

WHEREAS, the electricity generated by the Generating Facility will comply with the requirements of the Renewable Energy Law and satisfy a portion of Buyer's obligations under the Portfolio Standard to purchase renewable energy; and

WHEREAS, Supplier desires to sell to Buyer energy generated by the Generating Facility and the associated Portfolio Energy Credits and Renewable Energy Benefits and Buyer desires to purchase such Energy, Portfolio Energy Credits and Renewable Energy Benefits from Supplier, upon the terms and conditions set forth herein.

NOW, THEREFORE, in consideration of the premises and the covenants and conditions contained herein and for other good and valuable consideration, the receipt and sufficiency of which are hereby acknowledged, Buyer and Supplier, intending to be legally bound, hereby agree as follows:

1. DEFINITIONS

As used in this Agreement, the following terms shall have the meanings set forth below:

1.1 "Affiliate" means, with respect to any Person, each Person that directly or indirectly, controls or is controlled by or is under common control with such Person. For the purposes of this definition, "control" (including, with correlative meanings, the terms "controlled by" and "under common control with"), as used with respect to any Person, shall mean the possession, directly or indirectly, of the power to direct or cause the direction of the management and policies of such Person, whether through the ownership of voting securities or by contract or otherwise.

1.2 "After Tax Basis" means a basis such that any payment received or deemed to have been received by a Party (the "Original Payment") under the terms of Section 17.1 of this Agreement, shall be supplemented by a further payment to such Party so that the sum of the two (2) payments shall equal the Original Payment, after taking into account (a) all Taxes that would result from the receipt or accrual of such payments, if legally required, and (b) any reduction in Taxes that would result from the deduction of the expense indemnified against, if legally permissible, calculated by reference to the highest federal and Nevada statutory Tax rates applicable to corporations doing business in Nevada and on a net present value basis by reference to the applicable federal rate then in effect under section 1274(d) of the Internal Revenue Code of 1986, as such Law may be amended, preempted or superseded.

1.3 "Agreement" means this Long-Term Portfolio Energy Credit and Renewable Power Purchase Agreement together with the Exhibits attached hereto, as such may be amended from time to time.

1.4 "ALTA Survey" means a land survey prepared and certified in accordance with the standards jointly promulgated by the American Land Title Association and the American Congress on Surveying and Mapping.

1.5 "Annual Supply Amount" with respect to each Contract Year means the amount designated as the Annual Total MWh in Exhibit 13.

1.6 "Availability Notice" means a notice delivered by Supplier to Buyer pursuant to Article 13 notifying Buyer of the availability of the Generating Facility.

1.7 "Average Monthly Mead Firm Price" with respect to any calendar month, means the simple average of the daily Dow Jones Mead/Marketplace Electricity Price Index for Firm On-Peak energy for all calendar days during that month for which a Firm On-Peak energy price is published.

1.8 "Biennial Period" means (a) (i) if Supplier has elected to apply the Introductory Period, the period comprised of the first two consecutive Contract Years immediately following the Introductory Period or (ii) if Supplier has not elected to apply the Introductory Period, the period comprised of the first two full consecutive Contract Years, and (b) each subsequent period comprised of two consecutive Contract Years. For the avoidance of doubt, Biennial Periods will not be tabulated on a "rolling" two-year basis for purposes of this Agreement, but rather each Biennial Period during the Term will be a separate and discrete period from each other Biennial Period during the Term, with each Biennial Period commencing immediately following the expiration of the previous Biennial Period.

1.9 "Biennial Threshold" means with respect to any Biennial Period, the difference between (a) the sum of all Monthly Supply Amounts for such period, minus (b) the sum of all Excused Product Amount for such period.

1.10 "Billing Period" has the meaning ascribed to that term in Section 7.2.1.

1.11 "Business Day" means any day other than Saturday, Sunday and any day that is a holiday observed by Buyer.

1.12 "Buyer" has the meaning set forth in the preamble of this Agreement and includes such Person's permitted successors and assigns.

1.13 "Buyer's PC Account" means the account maintained by the PC Administrator for the purpose of tracking the production, sale, transfer, purchase and retirement of PCs by Buyer, or such other account as Buyer may designate from time to time.

1.14 "Buyer's Required Regulatory Approvals" means the approvals, consents, authorizations or permits of, or filing with, or notification to the Governmental Authorities listed on Exhibit 9, and such others as are deemed by Buyer to be necessary or desirable from time to time.

1.15 "Change in Law" means an amendment, modification or other change, enacted after the Effective Date, to, or the preemption or superseding after the Effective Date of, the Renewable Energy Law.

1.16 "Commercial Operation" means that (a) the Generating Facility has been constructed in accordance with the requirements of the IA and Good Utility Practice and has delivered Energy to and at the Delivery Point(s) and (b) all of the requirements set forth in Section 8.3 and Exhibits 6 and 7 have been satisfied.

1.17 "Commercial Operation Date" means the date on which Commercial Operation occurs.

1.18 "Commercial Operation Deadline" means the date specified in Exhibit 6 for the achievement of Commercial Operation.

1.19 "Compliance Cap" means, with respect to the first Contract Year, an amount equal to One Hundred Twenty-Nine Thousand Four Hundred and No/100 Dollars ($129,400), with such amount to be increased by one percent (1.0%) for each succeeding Contract Year. For purposes of the Stub Period, the Compliance Cap shall be prorated by multiplying the Compliance Cap for the first Contract Year by a fraction, the numerator of which is the number of full calendar months during the Stub Period and the denominator of which is 12.

1.20 "Compliance Costs" means the actual costs of Supplier required to maintain the Renewable Energy System status of the Generating Facility, or to cause the PCs associated with the Energy and Excess Energy from the Generating Facility to be generated and received by Buyer, in each case to the extent such required costs are attributable to a Change in Law, but, in no event will Compliance Costs

include costs (if any) of reviewing, contesting, or advocating (e.g. lobbying costs, attorneys' fees) with respect to any Change in Law.

1.21 "Contract Representative" of a Party means the individual designated by that Party in Exhibit 4 responsible for ensuring effective communication, coordination and cooperation between the Parties. A Party may change its Contract Representative by providing notice of such change to the other Party in accordance with the procedures set forth in Section 28.1.

1.22 "Contract Year" means each year during the Term beginning on January 1 and ending on December 31 of the calendar year following the Commercial Operation Date (or commencing on the Commercial Operation Date if the Commercial Operation Date is January 1).

1.23 "Control Area" has the meaning set forth in the OATT (as may be modified from time to time) of the Control Area Operator.

1.24 "Control Area Operator" means a Person, and its agents and any successors thereto, that is responsible for the operation of electric transmission system(s) and for maintaining reliability of the electric transmission system(s), including the Transmission System, within the Control Area. As of the Effective Date, the Control Area Operator is the Transmission Provider.

1.25 "Controlling Interest" with respect to a Person, means 50% or more of outstanding ownership interest, or the power to vote such percentage of ownership interest.

1.26 "CPUC" means California Public Utilities Commission and any successor entity thereto.

1.27 "Credit Rating" of a Person means the credit rating then assigned by a Relevant Rating Agency to the long-term, senior, unsecured, non-credit-enhanced indebtedness of that Person.

1.28 "Critical Project Milestone" means a Project Milestone designated as a Critical Project Milestone on Exhibit 6.

1.29 "Cure Period" has the meaning ascribed to that term in Section 23.2.

1.30 "Curtailed Product" has the meaning ascribed to that term in Section 9.7.

1.31 "Daily Delay Damages" means an amount equal to (a) with respect to the first (1st) through and including the thirtieth (30th) day subsequent to the Commercial Operation Deadline (or the extended Commercial Operation Deadline if Supplier has met the requirements of Section 8.4.1), Zero Dollars ($0) per day, (b) with respect to the thirty-first (31st) through and including the ninetieth (90th) day subsequent to the Commercial Operation Deadline (or the extended Commercial Operation Deadline if Supplier has met the requirements of Section 8.4.1), Two

Thousand Fifty Seven and 16/100 U.S. Dollars ($2,057.16); (c) with respect to the ninety-first (91st) through and including the one-hundred-fiftieth (150th) day subsequent to the Commercial Operation Deadline (or the extended Commercial Operation Deadline if Supplier has met the requirements of Section 8.4.1), Four Thousand One Hundred and Two and 01/100 U.S. Dollars ($4,102.01); and (d) with respect to the one-hundred-fifty-first (151st) through and including the two-hundred-tenth (210th) day subsequent to the Commercial Operation Deadline (or the extended Commercial Operation Deadline if Supplier has met the requirements of Section 8.4.1), Six Thousand One Hundred Fifty Nine and 17/100 U.S. Dollars ($6,159.17).

1.32 "Defaulting Party" has the meaning ascribed to that term in Section 23.1.

1.33 "Delivered Amount" means, with respect to any Delivery Hour, the actual amount of Energy delivered by Supplier and accepted by Buyer at the Delivery Point(s) during such Delivery Hour.

1.34 "Delivered PCs" means PCs that have been delivered by Supplier and awarded to Buyer pursuant to the terms of this Agreement, in accordance with the Portfolio Standard and which have been properly delivered and recorded to Buyer's PC Account.

1.35 "Delivery Hour" means each hour from the Operation Date through the end of the Term.

1.36 "Delivery Point(s)" means the delivery point(s) on the Transmission System set forth in Exhibit 5 and any other delivery point(s) as may be agreed to by Buyer in its sole discretion.

1.37 "Derating" means a condition of the Generating Facility as a result of which it is unable to produce the Supply Amount during a Delivery Hour.

1.38 "Development Security" has the meaning ascribed to that term in Section 16.1.

1.39 "Dispute" has the meaning ascribed to that term in Section 20.1.

1.40 "Dow Jones Mead/Marketplace Electricity Index" means the Dow Jones Mead/Marketplace Electricity Price Index, as published by Dow Jones & Company.

1.41 "Effective Date" has the meaning ascribed to that term in the preamble of this Agreement.

1.42 "Emergency" means any circumstance or combination of circumstances or any condition of the Generating Facility, the Interconnection Facilities, the Transmission System, or the transmission system of other transmission operators, which is (a) reasonably likely to endanger life or property and necessitates

immediate action to avert injury to persons or serious damage to property or (b) is reasonably likely to adversely affect, degrade or impair Transmission System reliability or transmission system reliability of the transmission system of other electric utilities. Any curtailment of the Generating Facility output by the Transmission Provider or the Control Area Operator shall be considered an Emergency, provided, however, that in no event shall any curtailment of the Generating Facility output made solely for economic reasons be considered an Emergency.

1.43 "Energy" means three phase, sixty (60) Hz electrical energy (measured in MWh) that is generated by the Generating Facility from and after the Operation Date.

1.44 "Environmental Law" shall mean any federal, state, local or other law, common law, regulation, rule, ordinance, code, decree, judgment, binding directive, or judicial or administrative order relating to the protection, preservation or restoration of human health, the environment, or natural resources, including any law relating to the releases or threatened releases of Hazardous Substances into any medium (including ambient air, surface water, groundwater, land, surface and subsurface strata) or otherwise relating to the manufacture, processing, distribution, use, treatment, storage, release, transport and handling of Hazardous Substances.

1.45 "EPC Contract" means the turnkey engineering, procurement and construction contract for the Generating Facility.

1.46 "Event of Default" has the meaning ascribed to that term in Section 23.1.

1.47 "EWG" means an "exempt wholesale generator" as defined in the Public Utility Holding Company Act of 2005 and implementing regulations issued thereunder, as such Law may be amended or superseded.

1.48 "Excess Energy" means, (a) (i) with respect to any Measurement Period, the portion of the Delivered Amount for such Measurement Period, if any, that exceeds one hundred and ten percent (110%) of the sum of all Monthly Supply Amounts with respect to all calendar months comprising the Measurement Period and (ii) with respect to the Introductory Period, the portion of the Delivered Amount for the Introductory Period, if any, that exceeds one hundred and ten percent (110%) of the sum of all Monthly Supply Amounts with respect to the calendar months comprising the Introductory Period, less (b) the amount of Excess Off-Peak Energy during such Measurement Period.

1.49 "Excess Off-Peak Energy" means, with respect to any calendar month, the portion of Off-Peak Delivered Amount for such calendar month, if any, that exceeds one hundred and ten percent (110%) of the Off-Peak Supply Amount for such calendar month, as set forth on Exhibit 13.

1.50 "Excess Product" means the Product associated with Excess Energy and Excess Off-Peak Energy.

1.51 "Excess Product Rate" means the rate for the Excess Product set forth in Exhibit 2A of this Agreement.

1.52 "Excused Product Amount" means, with respect to the calculation of a Shortfall for any Measurement Period, a Product for which, subject to the terms of this Agreement, Supplier is excused from selling or delivering such Product to Buyer, and for which Supplier shall not be liable for any damages, in the event that Supplier fails to deliver the Product to Buyer as a result of: (a) Force Majeure, (b) the inability or failure of Buyer to accept Energy for any reason, (c) Emergency (except for an Emergency with respect to the Generating Facility), (d) Planned Outage, or (e) Curtailed Product (as described in Section 9.7). Excused Product Amount will be calculated in accordance with Section 3.5.7.

1.53 "FERC" means the Federal Energy Regulatory Commission and any successor entity thereto.

1.54 "Force Majeure" has the meaning set forth in Article 19.

1.55 "Generating Facility" means Supplier's solar generating power plant as described in Exhibit 1, located at the Project Site in Clark County, Nevada as identified in Exhibit 3A and 3B and including mechanical equipment, and associated facilities and equipment required to deliver Energy to the Delivery Point(s), including items as further described in Exhibits 1, 3A, 3B, 5 and 14 hereto, and as such generating power plant may be expanded or otherwise modified from time to time in accordance with the provisions of this Agreement.

1.56 "Good Utility Practice" means (a) the applicable practices, methods and acts required by or consistent with applicable Laws and reliability criteria, whether or not the Party whose conduct at issue is a member of any relevant organization and otherwise engaged in or approved by a significant portion of the electric utility industry during the relevant time period, or (b) any of the practices, methods and acts which, in the exercise of reasonable judgment in light of the facts known at the time the decision was made, could have been expected to accomplish the desired result at a reasonable cost consistent with good business practices, reliability, safety and expedition. Good Utility Practice is not intended to be limited to the optimum practice, method or act to the exclusion of all others, but rather to acceptable practices, methods or acts generally accepted in the region and industry. Good Utility Practice shall include compliance with applicable Laws and regulations, applicable reliability criteria, and the criteria, rules and standards promulgated in the National Electric Safety Code and the National Electrical Code, as they may be amended or superseded from time to time, including the criteria, rules and standards of any successor organizations.

1.57 "Governmental Authority" means, as to any Person, any federal, state, local, or other governmental, regulatory or administrative agency, court, commission, department, board, or other governmental subdivision, legislature, rulemaking board, tribunal, or other governmental authority having jurisdiction over such

Person or its property or operations, and with respect to Supplier, specifically includes PUCN and WREGIS.

1.58 "Hazardous Substance" means (a) any petroleum or petroleum products, flammable materials, explosives, radioactive materials, friable asbestos, urea formaldehyde foam insulation and transformers or other equipment that contain dielectric fluid containing polychlorinated biphenyls (PCBs) in regulated concentrations, (b) any chemicals or other materials or substances which are now or hereafter become defined as or included in the definition of "hazardous substances", "hazardous wastes", "hazardous materials", "extremely hazardous wastes", "restricted hazardous wastes", "toxic substances", "toxic pollutants", "contaminants", "pollutants" or words of similar import under any Environmental Law and (c) any other chemical or other material or substance, exposure to which is now or hereafter prohibited, limited or regulated as such under any Environmental Law, including the Resource Conservation and Recovery Act, 42 U.S.C. section 6901 et seq., the Comprehensive Environmental Response Compensation and Liability Act, 42 U.S.C. section 9601 et seq., or any similar state statute, as such Laws may be amended or superseded.

1.59 "IA" means the Large Generator Interconnection Agreement that has been or will be executed between Supplier and Transmission Provider, or its successors, for the Generating Facility.

1.60 "IEEE-SA" means the Institute of Electrical and Electronics Engineers Standards Association and any successor entity thereto.

1.61 "Indemnified Party" has the meaning provided in Section 17.1.

1.62 "Indemnifying Party" has the meaning provided in Section 17.1.

1.63 "Interconnection Facilities" means the equipment and facilities, including any modifications, additions and upgrades made to such facilities, which are necessary to connect the Generating Facility to the Transmission System as described in Exhibit 5.

1.64 "Introductory Period" has the meaning set forth in Section 3.10.1.

1.65 "Introductory Product Rate" has the meaning set forth in Exhibit 2A.

1.66 "Invoice" means the statements described in Section 7.2 setting forth the information required therein, as well as the associated payment due for the Billing Period or the Contract Year, in accordance with Exhibit 2A.

1.67 "Law" means any federal, state, local or other law (including any Environmental Laws), common law, treaty, code, rule, ordinance, binding directive, regulation, order, judgment, decree, ruling, determination, permit, certificate, authorization, or approval of a Governmental Authority, which is binding on a Party or any of its property.

1.68 "Loss" means any and all claims, demands, suits, obligations, payments, liabilities, costs, fines, Penalties, sanctions, Taxes, judgments, damages, losses or expenses imposed by a third party upon an Indemnified Party or incurred in connection with a claim by a third party against an Indemnified Party.

1.69 "Material Adverse Effect" means, with respect to a Party, a material adverse effect on the ability of such Party to perform its obligations under this Agreement, individually or in the aggregate, or on the business, operations or financial condition of such Party.

1.70 "Maximum Amount" means, with respect to a Delivery Hour, an amount of Energy equal to 30.0 MWh.

1.71 "Mead" means the Mead Substation, an electricity trading hub located near Boulder City, Nevada.

1.72 "Measurement Period" means a Seasonal Period

1.73 "Measurement Period Index" means with respect to any Measurement Period, the simple average of all Average Monthly Mead Firm Prices for all calendar months comprising such Measurement Period.

1.74 "Measurement Period Shortfall Amount" has the meaning provided in Section 3.5.2.

1.75 "Measurement Period Supply Amount" with respect to any Measurement Period, means the lesser (in MWh) of (a) the sum of all Monthly Supply Amounts with respect to all calendar months comprising the Measurement Period, or (b) the SAM Generation Amount for such Measurement Period.

1.76 "Meter" means any of the physical or electronic metering devices, data processing equipment and apparatus associated with the meters required for (a) accurate determination of the quantities of Delivered Amounts and Station Usage from the Generating Facility and for recording other related parameters required for the reporting of data to Supplier, and (b) the computation of the payment due to Supplier from Buyer. Meters do not include any check meters Supplier may elect to install as contemplated by Section 7.1.1, other than the gross meter installed to determine gross energy (and Station Usage).

1.77 "Minimum Credit Rating" of a Person means that the Credit Rating of that Person is at least (a) A- (or its equivalent) as determined by Standard & Poor's and (b) A3 (or its equivalent) as determined by Moody's.

1.78 "Monthly Supply Amount" means, with respect to a calendar month, the amount shown on Exhibit 13 as the "Monthly Total MWh" for such month.

1.79 "Moody's" means Moody's Investor Services, Inc. and any successor entity thereto.

1.80 "MW" means megawatts of electrical power.

1.81 "MWh" and "MWhs" mean a megawatt hour or megawatt hours of electrical energy.

1.82 "NAC" means the Nevada Administrative Code.

1.83 "NERC" means the North American Electric Reliability Corporation and any successor entity thereto.

1.84 "Nevada Power Company" means Nevada Power Company, a Nevada corporation, d/b/a NV Energy, and an operating electric public utility, or any successor entity thereto, subject to the applicable rules of the PUCN and the FERC.

1.85 "Non-Defaulting Party" means the Party other than the Defaulting Party.

1.86 "Notice to Proceed" means the initial notification by the Supplier to its EPC contractor to commence work under the EPC Contract.

1.87 "NRS" means the Nevada Revised Statutes.

1.88 "OATT" means Transmission Provider's or Control Area Operator's then-effective Open Access Transmission Tariff, which has been accepted for filing by the FERC.

1.89 "Off-Peak" means hours ending 0100 through 0600 PPT, hours ending 2300 through 2400 PPT and all hours Sunday and NERC designated holidays.

1.90 "Off-Peak Delivered Amount" means Delivered Amount that is delivered during an Off-Peak Delivery Hour.

1.91 "On-Peak" means hours ending 0700 through 2200 PPT Monday through Saturday, other than on NERC designated holidays.

1.92 "Operating Representative" of a Party means any of the individuals designated by that Party, as set forth in Exhibit 4, to transmit and receive routine operating and Emergency communications required under this Agreement. A Party may change any of its Operating Representatives by providing notice of the change to the other Party in accordance with the notice procedures set forth in Section 28.1 herein.

1.93 "Operating Security" has the meaning ascribed to that term in Section 16.2.

1.94 "Operation Date" means the first date on which the Generating Facility is energized and operates in parallel with the Transmission System and delivers Energy to and at the Delivery Point(s).

1.95 "Party" or "Parties" means each entity set forth in the preamble of this Agreement and its permitted successor or assigns.

1.96 "PC" or "Portfolio Energy Credit" means a unit of credit which equals one kilowatt-hour of electricity generated, acquired or saved (or deemed so) by the Generating Facility, all as calculated by the PUCN operations staff and certified by the PC Administrator pursuant to the Nevada Renewable Energy Law (or by a successor Governmental Authority pursuant to a successor law if the Renewable Energy Law is replaced, superseded or preempted by another Law or regulatory regime tasked with enforcement of renewable energy quotas by utility providers in Nevada). Alternatively, if Buyer so elects in its sole discretion in writing to Supplier, a "PC" or "Portfolio Energy Credit" will instead equal one (1) kilowatt-hour of electricity generated, acquired or saved (or deemed so) by the Generating Facility, as calculated by WREGIS and certified by WREGIS.

1.97 "PC Administrator" means the Person appointed by the PUCN to administer the system of portfolio energy credits established pursuant to the Portfolio Standard or a successor Governmental Authority pursuant to a successor law if the Nevada Renewable Energy Law is replaced, superseded or preempted by another Law or regulatory regime tasked with enforcement of renewable energy quotas by utility providers in Nevada.

1.98 "PC Performance Factor" means ninety hundredths (0.90)

1.99 "PC Replacement Costs" has the meaning ascribed to that term in Section 3.6.1.

1.100 "PC Shortfall" has that meaning ascribed to that term in Section 3.6.1.

1.101 "PC Shortfall Amount" has the meaning ascribed to that term in Section 3.6.1.

1.102 "Penalties" means any penalties, fines, damages, or sanctions attributable to Supplier's failure to perform under this Agreement and actually imposed on Buyer pursuant to an order issued by any Governmental Authority, the Transmission Provider or the Control Area Operator.

1.103 "Performance Factor" means with respect to a Seasonal Period, ninety hundredths (0.90).

1.104 "Person" or "Persons" means any natural person, partnership, limited liability company, joint venture, corporation, trust, unincorporated organization, or Governmental Authority.

1.105 "Planned Outages" has the meaning ascribed to that term in Article 10.

1.106 "Portfolio Standard" means the amount of electricity that Buyer must generate, acquire, or save from renewable energy systems or efficiency measures specified by the percentage of the total amount of electricity sold by Buyer to its retail customers in the State of Nevada pursuant to the Renewable Energy Law, as established pursuant to NRS 704.7821, and the regulations, guidance and requirements promulgated thereunder, as may be amended, preempted or superseded from time to time (or pursuant to a successor law if the Nevada Renewable Energy Law is replaced, superseded or preempted by another Law or regulatory regime tasked with enforcement of renewable energy quotas by utility providers in Nevada).

1.107 "Power Quality Standards" means the Power Quality Standards established by NERC, WECC, Buyer, IEEE-SA, National Electric Safety Code, the National Electric Code, or their respective successor organizations or codes, as they may be amended or superseded from time to time, and consistent with Good Utility Practice.

1.108 "PPT" or "Pacific Prevailing Time" means Pacific Standard Time or Pacific Daylight Time, whichever is then prevailing in Las Vegas, Nevada.

1.109 "Product" means (a) all Energy produced by the Generating Facility, (b) all PCs (and any equivalent rights in any other jurisdiction) arising from the Generating Facility, and (c) all Renewable Energy Benefits arising from the Generating Facility.

1.110 "Product Rate" means the applicable rate(s) set forth in Exhibit 2A under "Product Rates."

1.111 "Project Milestone" means each of the milestones listed in Exhibit 6.

1.112 "Project Milestone Schedule" means the schedule of Project Milestones, completion dates and required documentation specified in Exhibit 6.

1.113 "Project Site" means the site for the Generating Facility, as more particularly described on Exhibit 3A and depicted on Exhibit 3B.

1.114 "PTC" means the production tax credit established pursuant to Section 45 of the United States Internal Revenue Code of 1986, as such Law may be amended or superseded.

1.115 "PUCN" means the Public Utilities Commission of Nevada and any successor entity thereto.

1.116 "PUCN Approval Date" means the date on which an order of the PUCN approving this Agreement becomes effective pursuant to NAC §703.790, as such Law may be amended or superseded.

1.117 "PUCN Approval Deadline" with respect to any matter submitted to the PUCN for approval means the expiration of the time period provided for by Nevada Law during which the PUCN is required to either approve or specify inadequacies with respect to such matter.

1.118 "QF" means a cogeneration or small power production facility which meets the criteria as defined in Title 18, Code of Federal Regulations, §§ 292.201 through 292.207, as such Law may be amended or superseded.

1.119 "Qualified Financial Institution" means a financial institution having an office in the United States, with total assets of at least ten billion dollars ($10,000,000,000) U.S. and whose Credit Rating is at least "A" by S&P and "A2" by Moody's.

1.120 "Relevant Rating Agency" means Moody's or S&P.

1.121 "Renewable Energy Benefits" means any and all renewable and environmental attributes, emissions reductions, credits, offsets, allowances reporting rights and benefits, however entitled, (a) available, allocated, assigned, awarded, certified or otherwise transferred or granted to Supplier or Buyer by the PC Administrator or any Governmental Authority in any jurisdiction in connection with the Generating Facility; or (b) associated with the production of energy from the Generating Facility or based in whole or part on the Generating Facility's use of renewable resources for generation or because the Generating Facility constitutes a renewable energy system or the like or because the Generating Facility does not produce greenhouse gasses, regulated emissions or other pollutants, whether any such credits, offsets, allowances or benefits exist now or in the future or whether they arise under existing Law or any future Law or whether such credit, offset, allowance or benefit or any Law, or the nature of such, is foreseeable or unforeseeable, but in all cases shall not mean PCs or Tax Credits. Renewable Energy Benefits includes such credits, offsets, allowance or benefits attributable to Energy generated by and Energy consumed by the Generating Facility, such as Station Usage (parasitic load).

1.122 "Renewable Energy Law" means an act of the Nevada Legislature relating to energy and requiring certain providers of electric service to comply with the portfolio standard for renewable energy, and providing for other matters relating thereto, codified as NRS §704.7801 to §704.7828, inclusive, and the rules and regulations of WREGIS, and the regulations, guidance and other requirements promulgated thereunder, in each case as such Laws, regulations, guidance and requirements may be amended, preempted or superseded.

1.123 "Renewable Energy System" means a generation facility that is both a "renewable energy system" as defined in the Renewable Energy Law and a "renewable Generating Unit" under WREGIS.

1.124 "Replacement Costs" has the meaning ascribed to that term in Section 3.5.3.

1.125 "SAM" means the U.S. Department of Energy System Advisor Model.

1.126 "SAM Generation Amount" means, for any given period, an amount of Energy (expressed in MWh) equal to the amount of Energy that a generating facility having the same characteristics as the Generating Facility would generate during such period, such amount to be calculated using SAM for facilities using the same relevant technology, as such model may be updated and/or calibrated upon the mutual agreement of the Parties from time to time to reflect the actual operating characteristics of the Generating Facility, or such other model as the Parties may mutually agree to use, and taking into consideration (a) direct normal irradiation as measured by the Weather Meter for such period, (b) dry bulb temperature, (c) wind speed, (d) wind direction, and (e) humidity, all as determined by the Weather Meter(s), in each case, during such Measurement Period.

1.127 "Seasonal Period" means a Summer Period or a Winter Period.

1.128 "Shortfall" has the meaning ascribed to that term in Section 3.5.1.

1.129 "Sierra Pacific Power Company" means Sierra Pacific Power Company, a Nevada corporation, d/b/a NV Energy, and an operating electric public utility, or any successor entity thereto, subject to the applicable rules of the PUCN, CPUC and the FERC.

1.130 "Standard and Poor's" or "S&P" means Standard and Poor's Ratings Group, a division of McGraw Hill, Inc. and any successor entity thereto.

1.131 "Standby Service" means the electric service supplied by Nevada Power Company for Station Usage pursuant to Schedule LSR, Large Standby Service Rider, as such tariff is in effect and as may be amended from time to time.

1.132 "Station Usage" means all electric energy used by the Generating Facility.

1.133 "Stub Period" means the period of time commencing on the Commercial Operation Date and ending on December 31 of the calendar year in which the Commercial Operation Date occurs (provided, however, that if the Commercial Operation Date occurs on January 1, then the term "Stub Period" will have no application to this Agreement).

1.134 "Stub Period Index" means with respect to the Stub Period, the simple average of all Average Monthly Mead Firm Prices for all full calendar months comprising the Stub Period.

1.135 "Stub Period Shortfall Amount" has the meaning provided in Section 3.5.2.

1.136 "Stub Period Supply Amount" with respect to the Stub Period, means the lesser (in MWh) of (a) the sum of all Monthly Supply Amounts with respect to all full calendar months comprising the Stub Period, or (b) the SAM Generation Amount for the Stub Period.

1.137 "Summer Period" means the contiguous period comprising the calendar months of May, June, July, August and September.

1.138 "Supplier" has the meaning set forth in the preamble of this Agreement and includes such Person's permitted successors and assigns.

1.139 "Supplier's Lenders" means any Persons, and their permitted successors and assignees, providing funding in connection with any development, bridge, construction, permanent debt, sale lease-back, or tax equity financing or refinancing for the Generating Facility.

1.140 "Supplier's Required Regulatory Approvals" means the approvals, consents, authorizations or permits of, or filings with or notifications to the Governmental Authorities listed on Exhibit 10.

1.141 "Supply Amount" means, with respect to any Delivery Hour, the amount of Energy stated in Exhibit 13.

1.142 "Tax" or "Taxes" means any federal, state, local or foreign income, gross receipts, license, payroll, employment, excise, severance, stamp, occupation, premium, windfall profits, environmental, customs duties, capital stock, franchise, profits, withholding, social security (or similar), unemployment, disability, real property (including assessments, fees or other charges based on the use or ownership of real property), personal property, transactional, sales, use, transfer, registration, value added, alternative or add-on minimum, estimated tax, or other tax of any kind whatsoever, or any liability for unclaimed property or escheatment under common law principles, including any interest, penalty or addition thereto, whether disputed or not, including any item for which liability arises as a transferee or successor-in-interest.

1.143 "Tax Credits" means any state, local and/or federal production tax credit, tax deduction and/or investment tax credit, accelerated depreciation, investment or financing grant or guarantee (including any cash grants in lieu of any of the foregoing items), and/or any other similar tax or related attribute specific to Generating Facility or the production of renewable energy therefrom and/or investments in renewable energy facilities.

1.144 "Term" has the meaning ascribed to that term in Section 2.2.

1.145 "Transmission Provider" means Nevada Power Company or any successor operator or owner of the Transmission System.

1.146 "Transmission System" means the facilities used for the transmission of electric energy in interstate commerce, including any modifications or upgrades made to such facilities, owned or operated by the Transmission Provider, except the Interconnection Facilities.

1.147 "UEPA" means the Utility Environmental Protection Act, as set forth in NRS 704.820 to 704.900, inclusive, and the PUCN regulations promulgated thereunder at NAC 703.415 to .427, inclusive, as such Laws may be amended or superseded.

1.148 "Weather Meter" has the meaning ascribed to that term in Section 7.1.7.

1.149 "WECC" means the Western Electric Coordinating Council (formerly Western System Coordinating Council) and any successor entity thereto.

1.150 "Winter Period" with respect to any calendar year, means the non-contiguous period comprised of the calendar months of January, February, March, April, October, November and December.

1.151 "WREGIS" means the Western Renewable Energy Generation Information System, or a successor organization/system.

1.152 "Yearly PC Amount" means , with respect to any Contract Year, the lesser (in MWh) of (a) the amount of PCs for a Contract Year stated in Exhibit 18, or (b) an amount of PCs equal to the kilowatt-hour equivalent of gross electric output of the SAM Generation Amount for such Contract Year.

2. TERM; TERMINATION AND SURVIVAL OF OBLIGATIONS

2.1 Effective Date. This Agreement shall become effective on the Effective Date.

2.2 Term. Supplier's obligation to deliver Product, and Buyer's obligation to accept and pay for Product, under this Agreement shall commence on the Operation Date and shall continue for a period of twenty-five (25) years from January 1 immediately following the Commercial Operation Date, subject to earlier termination of this Agreement pursuant to the terms hereof (the "Term"); provided, however, that unless the approvals described in Section 15.2 (PUCN Approval) are received as contemplated thereby, Buyer shall not be obligated to accept or pay for any Product, unless Buyer waives its right to terminate this Agreement pursuant to Section 15.3.

2.3 Termination.

2.3.1 Mutual Agreement. This Agreement may be terminated by written agreement of the Parties.

2.3.2 For Cause. This Agreement may be terminated at any time by the Non-Defaulting Party upon ten (10) Business Days' prior notice to the Defaulting Party if an Event of Default has occurred and is continuing after the applicable Cure Period (if any) set forth in Section 23.2 has expired. This Agreement may be terminated by Buyer if Supplier has incurred Daily Delay Damages for a period of two hundred ten (210) days without achieving Commercial Operation.

2.3.3 Optional Termination. This Agreement may be terminated in accordance with Article 15 in the event the PUCN approval is not obtained or is granted with conditions that are not reasonably acceptable to Buyer.

2.3.4 Limitation of Replacement Costs or PC Replacement Costs. This Agreement may be terminated in accordance with Section 3.5.6.

2.3.5 Force Majeure. This Agreement may be terminated by a Party if the other Party's obligations hereunder have been excused by the occurrence of an event of Force Majeure pursuant to Article 19 for longer than twelve (12) consecutive months.

2.4 Effect of Termination - Survival of Obligations. Any termination of this Agreement or expiration of the Term shall not release either Party from any applicable provisions of this Agreement with respect to:

2.4.1 The payment of any amounts owed to the other Party arising prior to or resulting from termination of, or on account of breach of, this Agreement;

2.4.2 Indemnity obligations contained in Article 17, which shall survive to the full extent of the statute of limitations period applicable to any third-party claim;

2.4.3 Limitation of liability provisions contained in Article 18;

2.4.4 For a period of two (2) years after the termination date, the right to submit a payment dispute pursuant to Article 20; or

2.4.5 The resolution of any dispute submitted pursuant to Article 20 prior to, or resulting from, termination.

3. SUPPLY SERVICE OBLIGATIONS

3.1 Supply Amount. Subject to the other provisions of this Agreement, commencing on the Commercial Operation Date, Supplier shall supply and deliver the Supply Amount to Buyer at the Delivery Point(s).

3.2 Dedication. All Product shall be dedicated exclusively to Buyer for so long as this Agreement is in force and effect. Supplier shall not, without Buyer's prior written consent (which Buyer may withhold in its sole discretion), (a) sell, divert, grant, transfer, or assign Product to any Person other than Buyer, (b) provide Buyer with electric energy, PCs, or Renewable Energy Benefits from any source other than the Generating Facility or (c) divert, redirect or make available the solar resource available to the Generating Facility to another generating facility, or any third party, such that the diversion of the solar resource results in a reduction below the Supply Amount produced by the Generating Facility. The

Parties agree that remedies at Law may be inadequate to protect each other in the event of a breach of this Section 3.2, and the Supplier hereby in advance agrees that the Buyer shall be entitled to seek without proof of actual damages, temporary, preliminary and permanent injunctive relief from any Governmental Authority of competent jurisdiction restraining the Supplier from committing or continuing any breach of this Section 3.2.

3.3 Energy Delivery; Change in Law.

3.3.1 General. Buyer shall take delivery of the Energy, including any Excess Energy, at the Delivery Point(s) in accordance with the terms of this Agreement. Supplier shall be responsible for all costs associated with delivery of the Energy, including any Excess Energy, to and at the Delivery Point(s). Buyer shall be responsible for all costs associated with delivery of the Energy, including any Excess Energy, from the Delivery Point(s). Notwithstanding anything in this Agreement to the contrary (other than Section 3.3.2, which will govern to the extent of any inconsistency with the following), Buyer shall be obligated to purchase or accept delivery of Energy and any Excess Energy from the Generating Facility only if the Generating Facility is at the time qualified as a Renewable Energy System and Buyer receives the PCs associated with such Energy and any Excess Energy as contemplated by this Agreement.

3.3.2 Change in Law. In the event that a Change in Law occurs, then, notwithstanding any other term or provision of this Agreement to the contrary, Supplier shall be required to expend sums up to the Compliance Cap to maintain the Renewable Energy System status of the Generating Facility, and to cause the PCs associated with the Energy and Excess Energy from the Generating Facility to be generated and received by Buyer (even where such expenditure may not be sufficient to comply with the Change in Law), provided that in no event will Supplier be required to expend more than the Compliance Cap in any Contract Year (prorated for the Stub Period as provided in Section 1.19) on Compliance Costs. In the event a Change in Law occurs during the Stub Period or in one Contract Year which provides for a compliance deadline in a future Contract Year, if necessary to maintain or achieve compliance, Supplier shall be required to expend sums up to the Compliance Cap during the Stub Period and in each Contract Year from the date of Change in Law until the compliance deadline. In the event that expenditure of Compliance Costs in an amount greater than the Compliance Cap will be required in the Stub Period or in any Contract Year in order to maintain the status of the Generating Facility as a Renewable Energy System under Nevada Law and the ability of the Generating Facility to generate PCs for the benefit of the Buyer, then Supplier will notify Buyer in writing of such occurrence as soon as reasonably practical, and provide to Buyer Supplier's good-faith and reasonable estimate as to the amount of the applicable Compliance Costs, and appropriate supporting documentation. Buyer will have two hundred ten (210) days after receiving such notice and supporting documentation

(during which period Buyer and Supplier will continue to carry out their respective obligations under this Agreement), in which to notify Supplier in writing whether Buyer will reimburse Supplier for Compliance Costs in excess of the Compliance Cap for the Stub Period or such Contract Year. If Buyer elects not to make such reimbursement, then, notwithstanding Section 3.3.1 to the contrary, following proof of Supplier's expenditure of the Compliance Cap (even where such expenditure may not be sufficient to comply with the Change in Law), Buyer will not be permitted to refuse to take Product at the Product Rate during the Stub Period or such Contract Year, due to the failure of the Generating Facility to qualify as a Renewable Energy System or to deliver PCs or other Renewable Energy Benefits as a result of the failure to comply with the Change in Law. If Buyer elects to make such reimbursement, then the amount of the reimbursement will be reflected on Supplier's first monthly invoice to Buyer after Supplier incurs such amount. The Parties agree that, without limitation of their other duties pursuant to this Agreement, the Parties will cooperate and consult with each other, reasonably and in good faith, with respect to the compliance requirements or implications of any Change in Law (which consultation will include consultation and discussion of how Compliance Costs may be best expended, minimized or mitigated, and/or a reasonable plan designed to maintain the status of the Generating Facility as a Renewable Energy System under Nevada Law and the ability of the Generating Facility to generate PCs for the benefit of the Buyer) with a view toward optimizing Renewable Energy Benefits available to Buyer hereunder, subject to Supplier's annual limitation on Compliance Costs provided for in this Section 3.3.2. If, as a result of Change in Law, the Generating Facility is not capable of qualifying as a Renewable Energy System through the expenditure of any amount of money, Buyer will continue to purchase the Product at the Product Rate in accordance with the other terms and conditions of this Agreement and subject to Supplier's compliance with other terms of conditions of this Agreement. In the event of any Change in Law, the Parties will negotiate and agree upon an equitable adjustment to the Yearly PC Supply Amount, consistent with this Section 3.3.2.

3.4 Consumption. Supplier shall supply its Station Usage directly from the Generating Facility, with back-up for such supply provided by Standby Service, as governed by the special conditions relating to "Backup Power" pursuant to the Nevada Power Company Schedule LSR, Large Standby Service Rider, or any successor rate schedule or as may be amended from time to time by the PUCN. In accordance with the foregoing, Supplier shall, no later than the Operation Date, acquire Standby Service necessary to meet such back-up electrical requirements of the Generating Facility, provided, however, for the avoidance of doubt, in no event may electrical energy provided by Standby Service be used as Energy for purposes of this Agreement.

3.5 Shortfall; Replacement Costs.

3.5.1 With respect to the Stub Period, if the sum of all Delivered Amounts is less than the product of (a) the applicable Performance Factor multiplied by (b) the difference between (i) the lesser of (A) the sum of all Monthly Supply Amounts with respect to all full calendar months comprising the Stub Period and (B) the sum of all SAM Generation Amounts for all full calendar months comprising the Stub Period minus (ii) the total amount of Energy associated with Excused Product Amount during the Stub Period, then a shortfall of Energy (a "Shortfall") will be deemed to exist for the Stub Period. Thereafter, with respect to each Measurement Period, if the sum of all Delivered Amounts is less than the product of (a) the applicable Performance Factor multiplied by (b) the difference between (i) the applicable Measurement Period Supply Amount minus (ii) the total amount of Energy associated with Excused Product Amount, then a Shortfall with respect to such Measurement Period will be deemed to exist. The Shortfall Amount for such Stub Period or Measurement Period will be calculated pursuant to Section 3.5.2 and the Replacement Costs pursuant to Section 3.5.3.

3.5.2 If a Shortfall exists with respect to the Stub Period, then a Shortfall Amount will be calculated in accordance with the following. "Stub Period Shortfall Amount" means, with respect to the Stub Period, an amount expressed in MWh equal to (a) the applicable Monthly Supply Amount for the months comprising the Stub Period minus (b) the total amount of Energy associated with Excused Product Amount (if any) for such Stub Period, minus (c) the sum of all Delivered Amounts during the stub Period. If a Shortfall exists with respect to a Measurement Period, then a Measurement Period Shortfall Amount will be calculated in accordance with the following. "Measurement Period Shortfall Amount" means, with respect to a Measurement Period, an amount expressed in MWh equal to (a) the applicable Measurement Period Supply Amount minus (b) the total amount of Energy associated with Excused Product Amount (if any) for such Measurement Period, minus (c) the sum of all Delivered Amounts. For the avoidance of doubt, if the calculation set forth in the preceding sentences yields an amount of zero or less for the Stub Period or a Measurement Period, then no Stub Period Shortfall Amount or Measurement Period Shortfall Amount will be deemed to exist with respect to such Stub Period or Measurement Period.

3.5.3 With respect to the Stub Period if a Stub Period Shortfall Amount exists and each Measurement Period for which a Measurement Period Shortfall Amount exists in accordance with Section 3.5.2, the Buyer's "Replacement Costs" with respect to such Stub Period or Measurement Period shall equal (a) the Stub Period Shortfall Amount or Measurement Period Shortfall Amount, as applicable, multiplied by (b) the amount equal to (i) the Buyer's cost to replace the Stub Period Shortfall Amount or Measurement Period Shortfall Amount, as applicable (as described in the following

sentence) minus (ii) the applicable Product Rate. The Buyer's cost to replace any Stub Period Shortfall Amount or Measurement Period Shortfall Amount, with respect to each MWh of Stub Period Shortfall Amount or Measurement Period Shortfall Amount, will equal the Stub Period Index or Measurement Period Index, as applicable. Notwithstanding anything in the foregoing to the contrary, if the calculation of Replacement Costs as set forth in this Section 3.5.3 yields an amount of zero or less for the Stub Period or a Measurement Period, then no Replacement Costs will be payable with respect to the Stub Period or such Measurement Period.

3.5.4 Within five (5) Business Days after the end of the Stub Period in which a Shortfall has occurred and any Measurement Period in which a Shortfall has occurred, Supplier will calculate the Replacement Costs with respect to such Stub Period Shortfall Amount or Measurement Period Shortfall Amount and provide Buyer with written notice of such calculation. Such Replacement Costs shall be reflected on the Invoice for the same Billing Period in which such Replacement Costs are calculated.

3.5.5 The Parties recognize and agree that the payment of amounts by Supplier pursuant to this Section 3.5 is an appropriate remedy and that any such payment does not constitute a forfeiture or penalty of any kind, but rather constitutes anticipated costs to Buyer under the terms of this Agreement. The Parties further acknowledge and agree that the damages for the failure of Supplier to supply and deliver Energy are difficult or impossible to determine, or otherwise obtaining an adequate remedy is inconvenient and the damages calculated hereunder constitute a reasonable approximation of the harm or loss.

3.5.6 In the event that Supplier has paid Replacement Costs and/or PC Replacement Costs to Buyer pursuant to Section 3.5 and/or Section 3.6 with respect to every Measurement Period occurring over a period of three (3) consecutive Contract Years, Supplier shall have no further liability hereunder to pay Replacement Costs or PC Replacement Costs to Buyer after such third consecutive Contract Year, provided that in such event Buyer may, in its sole discretion, either (a) terminate this Agreement after such third consecutive Contract Year sixty (60) days written notice to Supplier, provided that such written notice must be provided by Buyer within one hundred eighty (180) days after the expiration of such third consecutive Contract Year, or (b) elect to accept an offer from Supplier to reduce the Annual Supply Amount and/or the Yearly PC Amount, together with proportional reductions to the Monthly Supply Amounts and Supply Amount, which offer Supplier shall deliver to Buyer within fifteen (15) days after timely payment of such Replacement Costs and/or PC Replacement Costs for such third consecutive Contract Year. Notwithstanding the foregoing, if Buyer elects to accept such Supplier offer to reduce the Annual Supply Amount, Yearly PC Amount, Monthly Supply Amounts and Supply Amount, then such reductions will become

effective, retroactively, commencing upon the beginning of the Contract Year in which Buyer has accepted such offer. Supplier's obligation to pay Replacement Costs and PC Replacement Costs to Buyer pursuant to this Section 3.5 shall be reinstated, and Supplier shall deliver to Buyer revised Exhibits 13 and 18 setting forth the reduced amounts as reflected in the offer accepted by Buyer (in form reasonably acceptable to Buyer), and such revised Exhibits 13 and 18 will be deemed attached to this Agreement as the new Exhibits 13 and 18 for all purposes. If Buyer delivers a written notice to Supplier of Buyer's intent to terminate this Agreement pursuant to this Section 3.5.6, then Supplier may within thirty (30) days of receipt of such termination notice provide Buyer written notice that Supplier agrees to continue its obligation to pay Replacement Costs to Buyer pursuant to this Section 3.5 and upon Buyer's receipt of such notice, provided that Supplier has paid all Replacement Costs incurred prior to such date, (x) Buyer's termination notice shall automatically be deemed rescinded and (y) Supplier's obligation to pay Replacement Costs to Buyer pursuant to this Section 3.5 shall be reinstated.

3.5.7 As soon as practicable following any period of (a) Force Majeure, (b) the inability of Buyer to accept Energy (other than as permitted under this Agreement), (c) Emergency (except for an Emergency with respect to the Generating Facility that is not also a Force Majeure), (d) Planned Outage, or (e) Curtailed Product, in each case as a result of which Supplier has failed to deliver Product to Buyer during such period and, subject to the terms of this Agreement, such failure and Supplier's liability for damages therefor were excused, Supplier shall calculate the amount of Energy that Supplier was unable to generate and deliver to Buyer at the Delivery Point(s) solely as a result of such event; provided, however, that such amount shall not exceed the SAM Generation Amount for such period. Supplier shall provide Buyer its calculations and include all relevant back-up data and other information reasonably requested by Buyer. If Buyer disagrees with the calculation of the Excused Product Amount, then the Excused Product Amount will be determined through the dispute resolution provisions of Article 20.

3.6 PC Replacement Costs.

3.6.1 If after the PC Administrator issues all the PC statements or certificates for the Stub Period or a Contract Year there is a PC Shortfall, then Supplier shall pay Buyer for the replacement costs associated with such PC Shortfall and calculated in accordance with Section 3.6.2 ("PC Replacement Costs"). A "PC Shortfall," with respect to the Stub Period means the occurrence of the following with respect to such Stub Period: the sum of all Delivered PCs during the Stub Period is less than the product of (a) the PC Performance Factor multiplied by (b) an amount equal to (i) the Yearly PC Amount divided by twelve (12) and (ii) multiplied by the number of full months in the Stub Period minus (c) the

total amount of PCs associated with Excused Product Amount during the Stub Period. A PC Shortfall with respect to a Contract Year, means the occurrence of the following with respect to such Contract Year the sum of all Delivered PCs is less than the product of (a) the PC Performance Factor multiplied by (b) an amount equal to (i) the Yearly PC Amount minus (ii) the total amount of PCs associated with Excused Product Amount. "PC Shortfall Amount," with respect to the Stub Period means (a) the Yearly PC Amount divided by the number of full months in the Stub Period, minus (b) the total amount of PCs associated with Excused Product Amount during the Stub Period; minus (c) Delivered PCs for the Stub Period. PC Shortfall Amount with respect to any Contract Year means (a) the Yearly PC Amount; minus (b) the total amount of PCs associated with Excused Product Amount; minus (c) Delivered PCs. If the calculation of the PC Shortfall Amount set forth in this Section 3.6.1 yields an amount of zero or less for the Stub Period or a Contract Year, then no PC Shortfall will be deemed to exist with respect to such Stub Period or Contract Year .

3.6.2 The PC Replacement Costs shall be determined by Buyer exercising its reasonable discretion based on the estimated cost of purchasing replacement PCs of comparable character and with a comparable expiration date or the cost of replacing PCs not delivered with PCs of Buyer's choice already in Buyer's PC Account; provided, however, that Buyer shall not be required to actually purchase such replacement PCs in order to receive payment from Supplier for PC Replacement Costs. The Parties recognize and agree that the payment of amounts by Supplier pursuant to this Section 3.6, together with any Penalties allocable to Supplier's proportionate amount of Buyer's aggregate shortfall under the applicable Portfolio Standard (factoring in Supplier's shortfall in prior years carried forward as a deficit or reducing the surplus in such prior years) is an appropriate remedy and that any such payment does not constitute a forfeiture or penalty of any kind, but rather constitutes anticipated costs to Buyer under the terms of this Agreement. The Parties further acknowledge and agree that the amount payable by Supplier pursuant to this Section 3.6 are difficult or impossible to determine, or otherwise obtaining an adequate remedy is inconvenient and the damages calculated hereunder constitute a reasonable approximation of the harm or loss.

3.6.3 All information used by Buyer to establish PC Replacement Costs shall be verifiable by Supplier; and Buyer shall provide reasonable access to all such information supporting calculations within five (5) Business Days of Supplier's request for such information. Supplier agrees to execute a confidentiality agreement regarding the review of this information upon request by Buyer.

3.7 Adjustment to Supply Amount.

3.7.1 Baseline Adjustment to Supply Amount. No later than September 30th of the first full Contract Year, Supplier may, only once as set forth herein, increase or decrease, the Annual Supply Amount, Monthly Supply Amounts, Supply Amount, and Yearly PC Amount as follows: (a) pursuant to this Section 3.7.1, the Annual Supply Amount may not be increased to more than one hundred and twenty percent (120%) of the original Annual Supply Amount as of the Effective Date, and may not be decreased to less than eighty percent (80%) of the original Annual Supply Amount as of the Effective Date, (b) each Monthly Supply Amount shall increase or decrease in the same proportion as the increase or decrease of the Annual Supply Amount, (c) the Supply Amount shall increase or decrease in the same proportion as the increase or decrease of the Annual Supply Amount, (d) the Yearly PC Amount shall increase or decrease in the same proportion as the increase or decrease of the Annual Supply Amount, and (e) the Supply Amount shall not exceed the Maximum Amount. Supplier may exercise its adjustment right pursuant to this Section 3.7.1 by delivery of written notice thereof to Buyer, accompanied, in the case of an upward adjustment, by delivery to Buyer of the increase in Development Security (or Operating Security, if Operating Security is required to be posted at the time such upward adjustment right is exercised) that Supplier is required to post in connection with its exercise of this Section 3.7.1 and as further described in Section 16.1 (with respect to Development Security) or Section 16.2 (with respect to Operating Security). Any adjustment to Annual Supply Amount, Monthly Supply Amounts, Supply Amount and Yearly PC Amount provided for in this Section 3.7.1 shall only apply beginning with the first day of the next Contract Year following receipt of such an adjustment.

3.7.2 Periodic Increases to Supply Amount. After the end of the first Contract Year, Supplier may increase the Annual Supply Amount, Monthly Supply Amounts, Supply Amount and Yearly PC Amount, by providing written notice of such increase to Buyer no later than June 30th, provided that: (a) the increased Annual Supply Amount shall not be greater than one hundred and ten percent (110%) of the original Annual Supply Amount as of the Effective Date (or the Annual Supply Amount as modified pursuant to Section 3.7.1, if so modified) and the change in the percentage from the previous Annual Supply Amount may not be greater than five percent (5%), (b) each Monthly Supply Amount shall increase in the same proportion as the increase of the Annual Supply Amount, (c) the Supply Amount shall increase in the same proportion as the increase of the Annual Supply Amount, (d) the Yearly PC Amount shall increase in the same proportion as the increase of the Annual Supply Amount and (e) the Supply Amount shall not be increased above the Maximum Amount. If Supplier provides such notice on or prior to June 30th, then each increase to Annual Supply Amount, Monthly Supply Amounts, Supply Amount

and Yearly PC Amount provided for in this Section 3.7.2 shall apply to the next full Contract Year subsequent to the Contract Year in which Supplier provides notice of such an increase and the remaining Contract Years during the Term. If Supplier provides such notice after June 30th, then each increase to Annual Supply Amount, Monthly Supply Amounts, Supply Amount and Yearly PC Amount provided for in this Section 3.7.2 shall apply to the second full Contract Year subsequent to the Contract Year in which Supplier provides notice of such increase and the remaining Contract Years during the Term, and shall not apply to the first Contract Year subsequent to the Contract Year in which Supplier provides notice of such an increase.

3.7.3 Periodic Reductions to Supply Amount. After the end of the first Contract Year, Supplier may reduce the Annual Supply Amount, Monthly Supply Amounts, Supply Amount and Yearly PC Amount, by providing written notice of such reduction to Buyer, provided that: (a) the reduced Annual Supply Amount shall be greater than or equal to eighty-three and five tenths percent (83.5%) of the original Annual Supply Amount as of the Effective Date (or the Annual Supply Amount modified pursuant to Section 3.7.1, if so modified) and the change in the percentage from the previous Annual Supply Amount may not be greater than five percent (5%), (b) each Monthly Supply Amount shall be reduced in the same proportion as the reduction of the Annual Supply Amount, (c) the Supply Amount shall be reduced in the same proportion as the reduction of the Annual Supply Amount, and (d) the Yearly PC Amount shall decrease in the same proportion as the decrease of the Annual Supply Amount. A reduction in the Annual Supply Amount, Monthly Supply Amounts, Supply Amount or Yearly PC Amount shall in no event be made to assist, accommodate or otherwise allow for the sale of Product, Energy, PCs, or Renewable Energy Benefits to third parties. If Supplier provides such notice on or prior to June 30th, then each decrease to Annual Supply Amount, Monthly Supply Amounts, Supply Amount and Yearly PC Amount provided for in this Section 3.7.3 shall apply to the next full Contract Year subsequent to the Contract Year in which Supplier provides notice of such decrease and the remaining Contract Years during the Term. If Supplier provides such notice after June 30th, then each decrease to Annual Supply Amount, Monthly Supply Amounts, Supply Amount and Yearly PC Amount provided for in this Section 3.7.3 shall apply to the second full Contract Year subsequent to the Contract Year in which Supplier provides notice of such a reduction and the remaining Contract Years during the Term, and shall not apply to the first Contract Year subsequent to the Contract Year in which Supplier provides notice of such a reduction.

3.7.4 Exercise of Adjustments; Revised Exhibits. Supplier may exercise the adjustment right provided for in Section 3.7.1 no more than one time. From and after the time that Supplier's rights under Sections 3.7.2 and 3.7.3 vest, Supplier may exercise the periodic adjustment rights provided

for in both such sections combined no more than one time per Contract Year (meaning that in any Contract Year the Supplier may deliver to Buyer a notice for either an increase under Section 3.7.2, or a reduction under Section 3.7.3, but not both). With respect to any adjustments made by Supplier pursuant to the foregoing Sections 3.7.1, 3.7.2, or 3.7.3, Supplier shall deliver to Buyer revised Exhibits 13 and 18 setting forth the entirety of the Supply Amount and Yearly PC Amount, respectively, which revised exhibits will be subject to the reasonable approval of Buyer as to form and as to determination that the amounts reflected on such revised exhibits are in accordance with the adjustments as permitted pursuant to the foregoing Section 3.7.1, 3.7.2 and 3.7.3, and such revised Exhibits 13 and 18 will be deemed attached to this Agreement as the new Exhibit 13 and 18 for all purposes.

3.8 Title and Risk of Loss. Title to and risk of loss with respect to Energy delivered to Buyer by Supplier in accordance with this Agreement shall pass from Supplier to Buyer when such Energy is delivered at the Delivery Point(s). Until title passes, Supplier shall be deemed in exclusive control of the Energy and shall be responsible for any damage or injury caused thereby. After title to the Energy passes to Buyer, Buyer shall be deemed in exclusive control of such Energy and shall be responsible for any damage or injury caused thereby. Supplier warrants that it shall deliver the Energy to Buyer free and clear of all liens, security interests, claims and encumbrances or any interest therein or thereto by any Person arising prior to or at the Delivery Point.

3.9 Maximum Liability. Notwithstanding anything in this Agreement to the contrary, the maximum amount of damages and liabilities of any type in the aggregate with respect to any Biennial Period for which Supplier shall be responsible or liable hereunder arising out of or relating to any Shortfall or PC Shortfall (including for Replacement Costs, PC Replacement Costs and Penalties) shall not exceed the amount of the Operating Security (regardless of what amount of Operating Security is actually posted with Buyer); provided, however, the foregoing is not intended to affect application of Section 23.1.8, or a claim for Damages resulting therefrom. The reference to Operating Security in this Section 3.9 is for reference to the amount of the liability and nothing in this Section 3.9 shall require Buyer to rely on the Operating Security for recovery of the damages and liabilities contemplated herein.

3.10 Optional Introductory Period.

3.10.1 On or prior to the Commercial Operation Date, Supplier may elect to apply an Introductory Period to this Agreement by providing written notice to Buyer that it elects such application. If Supplier elects to apply the Introductory Period, then during the Introductory Period: (a) Supplier will be paid for Delivered Amounts (other than Excess Energy) at the Introductory Product Rate, and (b) Supplier will have no obligation to pay Replacement Costs, PC Replacement Costs or Penalties resulting from a PC Shortfall occurring during the

Introductory Period pursuant to Sections 3.5 and 3.6. The Introductory Period will begin on the Commercial Operation Date and end on the last day of the first Contract Year, unless terminated earlier pursuant to Section 3.10.2 (the "Introductory Period").

3.10.2 If Supplier elects to apply the Introductory Period pursuant to Section 3.10.1, then Supplier may, only once prior to the end of the Stub Period, provide written notice that it elects to terminate the Introductory Period early, in which case the Introductory Period will end at the end of the Stub Period and, beginning on January 1st of the first Contract Year, (a) Supplier will be paid for Delivered Amounts pursuant to Sections 4.1.2.2 and 4.1.2.3, and (b) Supplier will become fully obligated for Replacement Costs and PC Replacement Cost pursuant to Section 3.5 and 3.6.

4. PRICE OF PRODUCT

4.1 Product Payments. Supplier shall be paid for the Product based on the Delivered Amount of Energy, as follows:

4.1.1 Upon the Operation Date and prior to the Commercial Operation Date, all Product associated with Delivered Amounts of Energy from the Generating Facility shall be paid for by Buyer at the Excess Product Rate.

4.1.2 Subsequent to the Commercial Operation Date.

4.1.2.1 If Supplier has elected to apply the Introductory Period pursuant to Section 3.10, then all Product associated with Delivered Amounts of Energy from the Generating Facility, other than Excess Energy (for which the Excess Product Rate shall be paid), during the Introductory Period shall be paid for at the Introductory Product Rate set forth in Exhibit 2A; provided, however, that Supplier shall be paid at the Excess Product Rate for the calendar month in which the Commercial Operation Date occurs if the Commercial Operation Date occurs on or after the sixteenth (16th) day of such calendar month.

4.1.2.2 Thereafter, or if Supplier has not elected to apply the Introductory Period, all Product associated with Delivered Amounts of Energy from the Generating Facility, other than Excess Energy, shall be paid for by Buyer at the Product Rate set forth in Exhibit 2A; provided, however, that Supplier shall be paid at the Excess Product Rate for the calendar month in which the Commercial Operation Date occurs if the Commercial Operation Date occurs on or after the sixteenth (16th) day of such calendar month.

4.1.2.3 All Product associated with Excess Energy and Excess Off-Peak Energy from the Generating Facility, from and after the Commercial Operation Date, shall be paid for by Buyer at the Excess Product Rate.

4.1.3 Maximum Amount. Buyer shall not be required to accept from Supplier any Product delivered during any Delivery Hour in excess of the Maximum Amount, and no payment shall be owing to Supplier for any Product accepted by Buyer during any Delivery Hour in excess of the Maximum Amount.

4.2 Excused Product Amount. For the avoidance of doubt, Buyer shall not be required to pay for Product comprising Excused Product Amount, except with respect to Curtailed Product, which Buyer will pay for in accordance with Section 9.7.

4.3 Tax Credits. For the avoidance of doubt, the Parties agree that neither the Product Rate nor the Excess Product Rate are subject to adjustment or amendment if Supplier fails to receive any Tax Credits, or if any Tax Credits expire, are repealed or otherwise cease to apply to Supplier or the Generation Facilities in whole or in part, or Supplier or its investors are unable to benefit from any Tax Credits.

5. PORTFOLIO ENERGY CREDITS/RENEWABLE ENERGY BENEFITS

5.1 Delivery of Portfolio Energy Credits.

5.1.1 All PCs (and other rights to Portfolio Energy Credits and renewable energy credits under any Law or regulatory body (such as WREGIS)) and any benefits derived therefrom are exclusively dedicated to and vested in Buyer. Supplier shall deliver to Buyer all PCs derived from the Generating Facility, including PCs associated with Energy for Station Usage. Supplier shall timely prepare and execute all documents and shall take all actions necessary under applicable Law and/or WREGIS, applicable regulations or other requirements to cause the PCs to vest in Buyer, without further compensation, including, but not limited to, (a) taking all actions necessary to register or certify the PCs or the Generating Facility with the PUCN or any other Person (pursuant to NAC 704.8921 or otherwise), (b) causing the automatic transfer of the PCs derived from the Generating Facility to Buyer (pursuant to NAC 704.8927 or otherwise) (unless Buyer and Supplier mutually agree otherwise) and, (c) providing all production data and satisfying the reporting requirements of the PUCN or PC Administrator, as applicable.

5.1.2 Supplier and Buyer agree pursuant to NAC 704.8927 or WREGIS (if directed by Buyer), as such requirements may be amended, preempted or superseded, that all PCs awarded by the PC Administrator or any other regulatory authority in respect of the Generating Facility shall be

transferred automatically to the PC account of Buyer. Supplier shall take all steps necessary to cause the automatic transfer by the PC Administrator of such PCs to Buyer's account.

5.1.3 On or before January 31 of each calendar year following the Operation Date, Supplier, as owner or operator of the Renewable Energy System, shall deliver to Buyer a written attestation for the prior Contract Year (or Stub Period, if applicable) that the Energy represented by the kilowatt-hours used to certify Portfolio Energy Credits: (a) has not been and will not be used for any Person to obtain renewable energy credit in any state or jurisdiction, except for Buyer pursuant to this Agreement; (b) sold or otherwise exchanged for compensation or used for credit in any other state or jurisdiction; and (c) has not been and will not be included within a blended energy product certified to include a fixed percentage of renewable energy in any other state or jurisdiction, pursuant to Chapter 704 of the NAC, as such laws may be preempted, amended or superseded. No Person other than Buyer (or its designee) will be entitled to claim Portfolio Energy Credits (or renewable energy credits or portfolio energy credit equivalents in any jurisdiction) in connection with the Generating Facility. If any Person other than Buyer (or its designee) attempts to claim such credits, the Parties agree that remedies at Law may be inadequate to protect Buyer in the event of a breach of this Section 5.1.3, and the Supplier hereby in advance agrees (i) that Buyer shall be entitled to seek without proof of actual damages or the necessity of posting any bond or other security, temporary, preliminary and permanent injunctive relief from any Governmental Authority of competent jurisdiction restraining Supplier from committing or continuing any breach of this Section 5.1.3, and (ii) that it will promptly undertake all necessary actions to prevent such other Person from claiming such rights (including joining with or otherwise assisting Buyer in seeking the relief described in clause (i)).

5.2 Renewable Energy Benefits. All Renewable Energy Benefits shall be exclusively dedicated to and shall be vested in Buyer and Supplier hereby transfers to Buyer all Renewable Energy Benefits. Subject to Section 3.3.2, Supplier shall take or cause to be taken all actions and do or cause to be done all things necessary, proper or advisable or as reasonably requested by Buyer to qualify for and for Supplier or Buyer to receive all available Renewable Energy Benefits and, if received by Supplier, to transfer Renewable Energy Benefits to Buyer, without further compensation. Supplier shall timely execute all documents and shall timely take all actions necessary under any Law or other requirements to qualify for all available Renewable Energy Benefits and to cause Renewable Energy Benefits to vest in and be delivered to Buyer. Without limitation of the foregoing, Supplier acknowledges that the PCs will be used by Buyer in meeting its obligations pursuant to the Portfolio Standard and agrees to cooperate with Buyer in all respects to assist in Buyer's compliance with all applicable requirements set forth in the Portfolio Standard and shall provide all information reasonably requested by Buyer or otherwise necessary to allow the PUCN to determine compliance with the Portfolio Standard. No Person other than Buyer (or its

designee) will be entitled to claim Renewable Energy Benefits in any jurisdiction in connection with the Generating Facility. If any Person other than Buyer (or its designee) attempts to claim such benefits, the Parties agree that remedies at Law may be inadequate to protect Buyer in the event of a breach of this Section 5.2, and the Supplier hereby in advance agrees (a) that Buyer shall be entitled to seek without proof of actual damages, temporary, preliminary and permanent injunctive relief from any Governmental Authority of competent jurisdiction restraining the Supplier from committing or continuing any breach of this Section 5.2, and (b) that Supplier will promptly undertake all necessary actions to prevent such other Person from claiming such rights (including assisting Buyer in seeking the relief described in clause (a)).

6. RIGHT OF FIRST OFFER

6.1 Supplier (or any direct or indirect parent of Supplier), except in the case of a transfer to an Affiliate for which Buyer's consent would not be required under Section 22.2, shall not sell or transfer the Generating Facility (including any material portion of its assets, or any direct or indirect equity interests in Supplier), unless prior to such sale or transfer, Supplier provides written notice to Buyer of the intent to sell or transfer any such assets or interests. Upon Buyer's receipt of such notice, Buyer shall have the right to negotiate in good faith with Supplier for no more than sixty (60) days, unless otherwise agreed to by Supplier, the terms of the sale or transfer of the Generating Facility to Buyer or its designee on an exclusive basis. If Buyer desires to enter into such negotiation, Buyer shall notify Supplier of such decision within fifteen (15) days of receipt of Supplier's notice. Supplier will provide in a timely manner, information regarding the Generating Facility which is reasonable or customary to allow Buyer to perform due diligence and to negotiate in good faith for the purchase of the Generating Facility. The provisions of this Section 6.1 shall not apply to (i) the issuance, or any transfers, of any equity or other interests in Supplier directly or indirectly held by Supplier's Lenders in connection with the financing of the Generating Facility, including sale-leasebacks or other lease financing, or (ii) any corporate reorganization, merger, combination or similar transaction or transfer of assets or ownership interests involving Supplier or its Affiliates, provided that the equity interests in Supplier (excluding interests held by Supplier's Lenders) continue to be held, directly or indirectly, no less than 50% by Fotowatio Renewable Ventures, Inc. (and for the avoidance of doubt, the provisions of this Section 6.1 will not apply to the sale or transfer of equity interests in Fotowatio Renewable Ventures, Inc.).

6.2 In the event that Buyer does not exercise its right to negotiate pursuant to Section 6.1, Supplier must comply with Article 22 in any assignment or delegation of Supplier's rights, interests or obligations herein to a purchaser of the Generating Facility.

6.3 In the event that Supplier does not consummate a sale or transfer of the Generating Facility to any Person in accordance with this Article 6 within one hundred eighty (180) days of the date that Supplier provided Buyer with written notice pursuant to Section 6.1, Supplier (or any direct or indirect parent of

Supplier) shall then only sell or transfer the Generating Facility (or any material portion of its assets, or any direct or indirect equity interests in Supplier) after providing Buyer with written notice and the opportunity to negotiate in accordance with Section 6.1.

7. METERING, INVOICING AND PAYMENTS

7.1 Metering.

7.1.1 Meters. Buyer shall, at Supplier's cost, provide, install, own, operate and maintain all Meter(s) in good operating condition. If more than one Meter is installed, then data from all Meters shall be aggregated into one revenue Meter. The metering system design shall be subject to the Buyer's approval and shall be submitted to Buyer not later than the Supplier's completion of the Project Milestone relating to obtaining of construction permits. The Meters shall be used for quantity measurements under this Agreement. Such equipment shall be bi-directional and shall be capable of measuring and reading instantaneous and hourly real and reactive energy and capacity. The Meters shall also be used for, among other things, metering Station Usage of the Generating Facility. Supplier, at its expense, may install additional check meters. Supplier shall not install any check-metering equipment on or connected to Buyer-owned facilities including instrument transformers or metering circuitry wiring.

7.1.2 Location. Meters shall be installed at the location specified in Exhibit 5, or as otherwise reasonably determined by Buyer to effectuate this Agreement.

7.1.3 Non-Interference. Supplier shall not undertake any action that may interfere with the operation of the Meters. Supplier shall be liable for all costs, expense, and liability associated with any such interference with the Meters.

7.1.4 Meter Testing. Meters shall be tested at least once every two calendar years by Buyer. Either Party may request a special test of Meters or check meters, but the testing Party shall bear the cost of such testing unless there is an inaccuracy outside the limits established in American National Standard Institute Code for Electricity Metering (ANSI C12.1, latest version), in which case the Party whose meters were found to be inaccurate shall be responsible for the costs of the special testing. Meters installed pursuant to this Agreement shall be sealed and the seal broken only when the meters are to be adjusted, inspected or tested. Authorized representatives of both Parties shall have the right to be present at all routine or special tests and to inspect any readings, testing, adjustment or calibration of the Meters or check meters. Buyer's Operating Representative shall provide fifteen (15) Business Days prior notice of routine Meter testing to Supplier's Operating Representative. If Supplier has installed check meters in accordance with Section 7.1.1, Supplier shall

test and calibrate each such meter at least once every two calendar years. Supplier's Operating Representative shall provide fifteen (15) Business Days prior notice of routine check meter testing to Buyer's Operating Representative. In the event of special Meter testing, the Parties Operating Representatives shall notify each other with as much advance notice as practicable.

7.1.5 Metering Accuracy. If the Meters are registering but their accuracy is outside the limits established in ANSI C12.1, Buyer shall repair and recalibrate or replace the Meters and Buyer shall adjust payments to Supplier for the Delivered Amount for the lesser of the period in which the inaccuracy existed and ninety (90) days. If the period in which the inaccuracy existed cannot be determined, adjusted payments shall be made for a period equal to one-half of the elapsed time since the latest prior test and calibration of the Meters; however, the adjustment period shall not exceed ninety (90) days. If adjusted payments are required, Buyer shall render a statement describing the adjustments to Supplier within thirty (30) days of the date on which the inaccuracy was rectified. Additional payments to Supplier by Buyer shall be made within thirty (30) days of receipt of Buyer's statement. Any payments due Buyer pursuant to this Section 7.1.5 shall accompany Supplier's next Billing Period statement.

7.1.6 Failed Meters. If the Meters fail to register, Buyer shall make payments to Supplier based upon Supplier's check metering; provided, however, that if the accuracy of the check meters is subsequently determined to be outside the limits established in ANSI C12.1, Buyer shall adjust the payments to Supplier for the Delivered Amount calculated using the check meters for the lesser of the period in which the inaccuracy existed and ninety (90) days. If the period in which the inaccuracy existed cannot be determined, adjusted payments shall be made for a period equal to one-half of the elapsed time since the latest prior test and calibration of the check meters; however, the adjustment period shall not exceed ninety (90) days. If no such metering is available, payments shall be based upon the Parties' best estimate of the Delivered Amount. In such event, the Parties' estimated payments shall be in full satisfaction of payments due hereunder. If the Parties cannot agree on a best estimate of the Delivered Amount the dispute shall be resolved in accordance with Article 20.

7.1.7 Weather Meter. Supplier shall, at Supplier's cost, and no later than six (6) months prior to the Commercial Operation Date, provide, install at the site of the Generating Facility, and own, operate and maintain a device for the measurement of actual direct normal irradiance at the site (the "Weather Meter"), provided that Supplier shall not select the type of Weather Meter without the prior written consent of Buyer, which shall not be unreasonably withheld. No later than twelve (12) months prior to the Commercial Operation Date, the parties shall agree on the location of the Weather Meter and any applicable protocols for testing, accuracy, failure or other relevant characteristics of the Weather Meter.

7.2 Invoices.

7.2.1 Monthly Invoicing and Payment. On or before the 10th day of each month, Supplier shall send to Buyer an Invoice for the prior month (a "Billing Period"). Supplier shall calculate the Invoice based upon Meter data available to Supplier and as set forth in Exhibit 2B.

7.2.2 Replacement PC Invoice Calculation. In addition to the requirements for monthly Invoices set forth in this Section 7.2, if after the PC Administrator issues its final PC statement covering the Stub Period or for a Contract Year a PC Shortfall (as determined in accordance with Section 3.6.1) exists, Buyer shall send to Supplier a yearly Invoice for such Stub Period or Contract Year, which shall include the calculations set forth in Exhibit 2C.

7.2.3 Amounts Owing to Buyer. The Invoice referred to in Section 7.2.1 shall deduct any amounts owing to Buyer from amounts due to Supplier and shall indicate the net payment due Supplier or Buyer, as applicable. Supplier shall provide supporting data in reasonable detail to support its calculations of any amounts owing to Buyer. Notwithstanding any other term or provision of this Agreement to the contrary, Buyer may prepare and send to Supplier an invoice for amounts owing to Buyer, and any such amounts will be payable to Buyer within ten (10) Business Days from Supplier's receipt of such Invoice, subject to the terms and provisions of Section 7.2.5.

7.2.4 Method of Payment. Buyer or Supplier, as applicable, shall remit the payment of any undisputed amounts by wire or electronic fund transfer or otherwise pursuant to the instructions stated in Exhibit 4. Payment will be made on or before the later of the 20th day following the end of each month (or the next following Business Day, if such 20th day does not fall on a Business Day) or ten (10) Business Days from receipt of Invoice during the Term.

7.2.5 Examination and Correction of Invoices. As soon as practicable either Party shall notify the other Party in writing of any alleged error in an Invoice.

7.2.5.1 If a Party notifies the other Party of an alleged error in an Invoice, the Parties agree to make good faith efforts to reconcile the billing and mutually agree on the appropriate remedy, if any.

7.2.5.2 If a correction is determined to be required, the invoicing Party shall provide an adjusted Invoice to the invoiced Party. If such error results in an additional payment to the invoicing Party, the invoiced Party shall pay such invoicing Party the amount of the adjusted Invoice within thirty (30) calendar days

of the date of receipt of the adjusted Invoice. If such error resulted in a refund owed to the invoiced Party, the invoicing Party shall pay the invoiced Party the amount of the adjusted Invoice within thirty (30) calendar days of the date of the statement or at invoiced Party's option, the invoiced Party may offset such amount against the subsequent monthly payment to Invoicing Party.

7.2.5.3 If an invoicing Party fails to provide the invoiced Party with notice of any alleged error in the invoicing Party's Invoice within twelve (12) months of the invoiced Party's receipt of such Invoice, then the invoicing Party shall be deemed to have waived all rights to object to such Invoice.

7.3 Overdue Amounts and Refunds. Overdue amounts and refunds of overpayments shall bear interest from and including, the due date or the date of overpayment, as the case may be, to the date of payment of such overdue amounts or refund at a rate calculated pursuant to 18 C.F.R. § 35.19a, as such Law may be amended or superseded.

7.4 Access to Books and Records. Supplier agrees to make available for inspection upon five (5) Business Days written notice from Buyer its books and records for the purpose of allowing Buyer to verify the information contained within the invoices presented pursuant to Section 7.2.

7.5 Parties Right to Offset. Either Party shall have the right to offset any amounts owed to the other Party under this Agreement or with respect to Standby Service.

7.6 Taxes. Buyer is responsible for any Taxes imposed on or associated with the Energy or its delivery from the Delivery Point. Supplier is responsible for any Taxes imposed on or associated with the Energy or its delivery up to or at the Delivery Point. Either Party, upon written request of the other Party, shall provide a certificate of exemption or other reasonably satisfactory evidence of exemption if either Party is exempt from Taxes, and shall use reasonable efforts to obtain and cooperate with the other Party in obtaining any exemption from or reduction of any Tax. Each Party shall hold harmless the other Party from and against Taxes imposed on the other Party as a result of a Party's actions or inactions and that otherwise would not have occurred in the absence of this Agreement in accordance with Article 17.

8. FACILITY CONSTRUCTION; OPERATIONS AND MODIFICATIONS

8.1 Construction of Generating Facility. Supplier shall construct or cause the Generating Facility to be constructed in accordance with Good Utility Practices, in accordance with the Project Milestones and to ensure (a) Supplier is capable of meeting its supply obligations over the Term, (b) the Generating Facility is at all times considered a Renewable Energy System (subject to the provisions of Section 3.3.2), (c) the Generating Facility is at all times in compliance with all requirements imposed on Renewable Energy Systems as set forth in the

applicable Renewable Energy Law (subject to the provisions of Section 3.3.2), and (d) upon completion of construction, the Generating Facility will be in compliance with all requirements of an eligible renewable energy resource as set forth in the California Renewables Portfolio Standard Program as California Renewable Energy Law is in effect as of the Effective Date. Supplier shall construct or cause the Generating Facility to be constructed on the Project Site. Supplier shall deliver to Buyer an ALTA Survey of the Project Site within ten (10) days of such survey becoming available to Supplier, but in no event later than the issuance of the Notice to Proceed in accordance with Exhibit 6. Supplier shall provide to Buyer, within thirty (30) days after execution of the IA, a copy of the IA, showing that such IA conforms in all respects to the single line diagram of the Generating Facility, Interconnection Facilities, the Delivery Point(s) and the location of Meters as set forth in Exhibit 5, except for changes from Exhibit 5 that have been consented to by Buyer in writing in its sole discretion, in which case Supplier shall provide a revised Exhibit 5 reflecting such changes. Supplier shall provide to Buyer in a form satisfactory to Buyer (y) not later than the Supplier's completion of the Project Milestone relating to obtaining of construction permits, a completed version of Exhibit 14; and (z) within thirty (30) days after the Commercial Operation Date, a revised version of Exhibit 14 reflecting the Generating Facility as built. At Buyer's request, Supplier shall provide Buyer with copies of the construction contract for the facility and any documentation and drawings reasonably requested by Buyer, redacted of any pricing information and any other information Supplier is not permitted to disclose pursuant to a confidentiality agreement.

8.2 Performance of Project Milestones. Supplier shall complete each Project Milestone specified in Exhibit 6 on or before 1600 hours PPT on the date specified for each Project Milestone listed in Exhibit 6.

8.2.1 Completion of Project Milestones. Upon Supplier's completion of each Project Milestone, Supplier shall provide to Buyer in writing, pursuant to Section 28.1, documentation as specified in Exhibit 6 and reasonably satisfactory to Buyer demonstrating such Project Milestone completion within thirty (30) days of such completion but no later than the date specified for each Project Milestone listed in Exhibit 6. Buyer shall acknowledge receipt of the documentation provided under this Section 8.2.1 and shall provide Supplier with written acceptance or denial of each Project Milestone within fifteen (15) Business Days of receipt of the documentation. If any Project Milestone (other than a Critical Project Milestone) is not completed on or before the date specified in Exhibit 6, Supplier will inform Buyer of a revised projected date for the occurrence or completion of such event (which will be deemed the new deadline for such Project Milestone), of the impact on the timing of the Commercial Operation Date (and on any other Project Milestone), and will provide Buyer with a written report containing Supplier's analysis of the reasons behind the failure to meet the original Project Milestone deadline and whether remedial actions are necessary or appropriate, and describing any remedial actions that the Supplier intends to undertake to ensure the timely

achievement of the Commercial Operation Date. Provided that Supplier complies with the requirements of the preceding sentence, then no failure of Supplier to achieve a Project Milestone (other than a Critical Project Milestone) on or before the scheduled date will constitute an Event of Default.

8.2.2 Progress Towards Completion. Supplier shall notify Buyer's Contract Representatives promptly (and in any event within ten (10) Business Days) following its becoming aware of information that leads to a reasonable conclusion that a Project Milestone will not be met, and shall convene a meeting with Buyer to discuss the situation not later than fifteen (15) Business Days after becoming aware of this information.

8.3 Commercial Operation Date.

8.3.1 Notice of Testing. Supplier shall notify Buyer's Contract Representatives at least ten (10) Business Days prior to the commencement of any performance tests required by the EPC Contract or the IA. Buyer shall have the right to be present at and witness each such test, but such presence shall not be construed as an obligation on Buyer's part to design, conduct, monitor or endorse any test results). Supplier shall notify Buyer at least ten (10) Business Days prior to the commencement of the performance tests required by Exhibit 7. Buyer shall be deemed to waive its right to be present at the performance tests if Buyer fails to appear at the scheduled time for the performance tests.

8.3.2 Officer Certification. Within five (5) Business Days of the successful completion of the performance tests pursuant to Exhibit 7, Supplier shall provide Buyer with a written certification (certified by a duly authorized representative of Supplier) stating the following:

"I, [Name], in my capacity as the duly appointed [Title] of [Supplier] ("Supplier") hereby certify, on behalf of Supplier that (a) the Generating Facility has been constructed in accordance with the requirements of the IA and Good Utility Practice and has delivered Energy to and at the Delivery Point(s); (b) all of the requirements set forth in Sections 8.1 and 8.3, and Exhibits 6 and 7 of the Long-Term Portfolio Energy Credit And Renewable Power Purchase Agreement (the "Agreement") between Supplier and Buyer have been satisfied; (c) I am authorized to act on behalf of and bind Supplier with respect to this certificate; (d) Supplier acknowledges that Buyer is relying on this certification in connection with carrying out its obligations under the Agreement and Supplier will indemnify Buyer for any inaccuracy related to this certification."

8.3.3 Dispute of Commercial Operation. Buyer will have fifteen (15) Business Days after receipt of the certification required by this Section 8.3 in which to contest such certification. Buyer and Supplier will then attempt for no more than fifteen (15) Business Days after Buyer's notice of dispute to

resolve such dispute. If the Parties are unable to resolve such dispute within fifteen (15) Business Days, then either Party may seek resolution of such dispute in accordance with Section 20. Notwithstanding the foregoing, Buyer's failure to dispute the certification will in no way affect its rights to indemnification for any inaccuracy related to the certification, including, without limitation, for any loss of the required extension payment that would have otherwise been due pursuant to Section 8.4 or overpayments that may be paid by Buyer due to such inaccurate certification.

8.4 Failure to Achieve Commercial Operation; One-Time Extension.

8.4.1 Supplier may elect one time only to extend the Commercial Operation Deadline by one hundred eighty (180) days if, no later than ninety (90) days prior to the original Commercial Operation Deadline hereunder, Supplier (a) provides written notice of its intent to extend the Commercial Operation Deadline and (b) pays to Buyer an extension payment equal to fifty percent (50%) of the amount of the Development Security, which payment shall be retained by Buyer regardless of whether or not Supplier timely or ever reaches Commercial Operation. For clarification only, the extension payment contemplated hereunder will (a) not be treated as security, (b) not be refundable under any circumstances, (c) not be paid from the Development Security and (d) be retained by Buyer as a fee in consideration of the extension of the Commercial Operation Deadline.

8.4.2 In the event Supplier fails to achieve Commercial Operation by the Commercial Operation Deadline (or the extended Commercial Operation Deadline if Supplier has met the requirements of Section 8.4.1), Buyer shall elect to either (a) require Supplier to pay to Buyer, and Buyer shall be entitled to collect or retain, as applicable, an amount equal to the full Development Security as liquidated damages for Supplier's failure to meet its obligations prior to the Commercial Operation Deadline (or the extended Commercial Operation Deadline if Supplier has met the requirements of Section 8.4.1), or (b) commence collection of Daily Delay Damages in accordance with Section 8.5. Buyer shall provide written notice to Supplier of Buyer's election with ten (10) Business Days of the Commercial Operation Deadline (or the extended Commercial Operation Deadline if Supplier has met the requirements of Section 8.4.1). If Buyer elects and following Buyer's collection of the full Development Security amount from Supplier (or from security provided on Supplier's behalf), this Agreement will be terminated, and, except as provided in Section 8.4.3, neither Party will have any further obligations hereunder, except those obligations expressly provided to survive termination pursuant to Section 2.4. The Parties agree that it would be extremely difficult and impracticable under presently known and anticipated facts and circumstances to ascertain and fix the actual damages Buyer would incur if the Supplier does not meet its obligations hereunder prior to the Commercial Operation Deadline (as may be extended in accordance with

Section 8.4.1), and, accordingly, the Parties agree that if elected by Buyer, retention by Buyer of the full Development Security is reasonable as liquidated damages, and not as a penalty, except as provided in Section 8.4.3.

8.4.3 Except for collection of the Development Security amount, the liquidated damages provisions of Section 8.4.2 and the provisions of Article 18 limiting a party's damages shall not apply, and Buyer's damages shall not be limited to the Development Security where Supplier willfully fails to meet its obligations prior to the Commercial Operation Deadline (or the extended Commercial Operation Deadline if Supplier has met the requirements of Section 8.4.1). Supplier shall be deemed to have willfully failed to meet its obligations prior to the Commercial Operation Deadline (or the extended Commercial Operation Deadline if Supplier has met the requirements of Section 8.4.1) where subsequent to termination on account of failure to meet the Commercial Operation Deadline (or the extended Commercial Operation Deadline if Supplier has met the requirements of Section 8.4.1), within three (3) years of the termination date, Supplier or any Affiliate of Supplier generates energy from such generating facility that is sold to a third party other than Buyer unless (a) such Person has first offered to sell the energy, PCs and Renewable Energy Benefits from such facility to Buyer on the identical terms and conditions set forth in this Agreement (other than changes in the dates for completion of the facility) and (b) Buyer has either declined such offer or Buyer has sought and failed to obtain regulatory approval for such agreement.

8.4.4 The provisions of this Section 8.4 are in addition to, and not in lieu of, any of Buyer's rights or remedies under Article 23.

8.5 Delay Damages.

8.5.1 In the event the Supplier fails to achieve Commercial Operation by the Commercial Operation Deadline (or the extended Commercial Operation Deadline if Supplier has met the requirements of Section 8.4.1), and Buyer has not elected to collect and retain the Development Security in accordance with Section 8.4.2, for each day that the Supplier fails to achieve Commercial Operation thereafter, Supplier shall pay to Buyer liquidated damages equal to Daily Delay Damages up to a maximum amount of Seven Hundred Thirty Nine Thousand One Hundred U.S. Dollars ($739,100). Supplier shall pay any amounts owed to Buyer under this Section 8.5 in the Billing Period immediately succeeding the Billing Period during which Supplier's obligation to pay such amounts arose.

8.5.2 In addition to amounts payable pursuant to Section 8.5.1, Supplier shall be liable, in accordance with Section 17.1, for any Penalties incurred or suffered by Buyer as a result of Supplier's failure to achieve Commercial Operation by the Commercial Operation Deadline (or the extended

Commercial Operation Deadline if Supplier has met the requirements of Section 8.4.1).

8.5.3 The provisions of this Section 8.5 are in addition to, and not in lieu of, any of Buyer's rights or remedies under Article 23.

8.5.4 The Parties recognize and agree that the payment of amounts by Supplier pursuant to this Section 8.5 is an appropriate remedy and that any such payment does not constitute a forfeiture or penalty of any kind, but rather constitutes anticipated costs to Buyer under the terms of this Agreement.

8.6 Modification. Without the prior written consent of Buyer, which shall not be unreasonably withheld, Supplier shall not be entitled to make any modification to the Generating Facility that might (a) expose Buyer to any additional liability or increase its obligations under this Agreement or (b) adversely affect Supplier's or Buyer's ability to perform its obligations under this Agreement or any Law or to any third party. Any permitted modifications shall be conducted in accordance with Good Utility Practice and all applicable Laws and reliability criteria, as such may be amended from time to time, and made in compliance with the requirements of Article 10.

8.7 Operation and Maintenance. Supplier, at all times shall install, operate, maintain and repair the Generating Facility in accordance with Good Utility Practice and to ensure (a) Supplier is capable of meeting its supply obligations over the Term, (b) the Generating Facility is at all times a Renewable Energy System (subject to the provisions of Section 3.3.2) and (c) Supplier is at all times in compliance with all requirements of a renewable energy generator set forth in the Renewable Energy Law (subject to the provisions of Section 3.3.2). Supplier agrees to (x) maintain records of all operations of the Generating Facility in accordance with Good Utility Practice, and (y) follow such regulations, directions and procedures of Buyer, the Control Area Operator, the Transmission Provider, WECC, NERC and any applicable Governmental Authority to protect and prevent the Transmission System from experiencing any negative impacts resulting from the operation of Supplier's Generating Facility. In the event of an inconsistency, Buyer shall choose whose procedures shall govern. Each Party shall use all reasonable efforts to avoid any interference with the other's operations. Supplier shall cause the Energy of the Generating Facility to meet the Power Quality Standards at all times, and shall operate the Generating Facility consistent with WECC, NERC, Buyer, Control Area Operator and Transmission Provider requirements.

8.8 Operation and Maintenance Agreement. No later than ninety (90) days prior to the Commercial Operation Date, if the owner of the Generating Facility is not the operator, Supplier shall provide a copy of the agreement between Supplier and the operator which requires the operator to operate the Generating Facility in accordance with the terms hereof which shall be attached to this Agreement as Exhibit 15. Supplier shall also provide a certified copy of a certificate warranting that the operator is a corporation, limited liability company or partnership in good

standing with the State in which the Generating Facility is located, which shall be attached to this Agreement as part of Exhibit 15.

8.9 Ground Lease; Rights-of-way. If the land on which the Generating Facility is located is not owned by Supplier, no later than sixty (60) days prior to commencement of on-site development activities at the Generating Facility, Supplier shall provide a copy of the agreement with the owner of the land which establishes the right of Supplier to construct and operate the Generating Facility on the land and the existence of required rights-of-way and easements, which shall be attached to this Agreement as Exhibit 16.

8.10 Fossil Fuel. If the Generating Facility uses any fossil fuel as an energy source to produce Energy, Supplier shall not permit, without the express prior written consent of Buyer, fossil fuel to constitute more than two percent (2%) of the total input, as measured in British thermal units, used by the Generating Facility to produce Energy.

8.11 Right to Review. Buyer and Supplier each shall have the right to review during normal business hours the relevant books and records of the other Party to confirm the accuracy of such as they pertain only to transactions under this Agreement. The review shall be consistent with standard business practices and shall follow reasonable notice to the other Party. Reasonable notice for a review of the previous month's records shall be a minimum of ten (10) Business Days. If a review is requested of other than the previous month's records, then notice of that request shall be provided with a minimum of fifteen (15) Business Days notice by the requesting Party. The notice shall specify the period to be covered by the review.

9. EMERGENCY AND CURTAILMENT

9.1 In the event of an Emergency, Buyer and Supplier shall promptly comply with any applicable requirements of any Governmental Authority, NERC, WECC, Control Area Operator, Transmission Provider, transmission operator, or any successor of any of them, regarding the reduced or increased generation of the Generating Facility.

9.2 Each Party shall provide prompt oral and written notification to the other Party of any Emergency. If requested by the other Party, the Party declaring the Emergency shall provide a description in reasonable detail of the Emergency and any steps employed to cure it.

9.3 In the event of an Emergency, either Party may take reasonable and necessary action to prevent, avoid or mitigate injury, danger, damage or loss to its own equipment and facilities, or to expedite restoration of service; provided, however, that the Party taking such action shall give the other Party prior notice, if practicable, before taking any action. This Section 9.3 shall not be construed to supersede Sections 9.1 and 9.2.

9.4 In the event of an Emergency, Buyer can request Supplier not to institute a Planned Outage of the Generating Facility and Supplier agrees to take all commercially reasonable steps to avoid instituting the Planned Outage until such time as the condition of the Emergency has passed.

9.5 In the event of an Emergency declared by Supplier, such that Supplier cannot deliver some or all of the Supply Amount to and at the Delivery Point(s), the Product that is not able to be delivered associated with such Emergency will not constitute Excused Product Amount unless such Supplier declared Emergency qualifies as an event of Force Majeure in accordance with Article 19.

9.6 In the event of an Emergency, as a result of which Buyer is unable to receive some or all of the Product at the Delivery Point(s) or is unable to deliver some or all of the Product to its customers, then Buyer shall have no payment liability in respect of the Product that Buyer is unable to receive. The Supply Amount and Yearly PC Amount will be reduced accordingly in part or total, as applicable, during the period of any such Emergency.

9.7 Supplier shall curtail deliveries of Energy at any time, in whole or in part, in a quantity and for any duration specified by Buyer upon notice at least thirty (30) minutes prior to the next available scheduling hour, or as mutually agreed upon (which notice may be given by telephone followed by e-mail or e-mail only) to Supplier. The amount of Energy curtailed and any associated PCs ("Curtailed Product") shall be reasonably determined by Supplier after the curtailment has ended based upon the Energy that could have been generated and delivered to Buyer at the Delivery Point(s), but that was not generated and delivered solely as a result of Buyer's curtailment notice. Supplier shall promptly provide Buyer with such information and data as Buyer may request to confirm to its satisfaction the amount of Curtailed Product that was not generated as a result of Buyer's curtailment notice. Supplier shall be paid for the Curtailed Product at the Product Rate, and, if Supplier has elected to utilize PTCs under applicable Tax Law, an amount equal to the value of the PTCs as of the Commercial Operation Date (as determined by Section 45 of the United States Internal Revenue Code of 1986, as such Law may be amended or superseded), if any, associated with the Curtailed Product, as if the Curtailed Product were delivered to Buyer. Supplier will be paid the Excess Product Rate for any Curtailed Product (or any portion thereof) that would have been payable by Buyer at the Excess Product Rate. During any such period of curtailment, Supplier shall not produce Product (to the extent curtailed by Buyer) or sell Product to any third party. Curtailed Product shall be deemed to be Excused Product Amount for purposes of calculating a Shortfall or PC Shortfall. Under no circumstance shall the provisions of this Section 9.7 apply to a curtailment of the Generating Facility based upon an Emergency.

9.8 The Parties acknowledge that as of the Effective Date, the Buyer and the Transmission Provider are the same legal entity, and further acknowledge that in accordance with FERC regulations relating to open-access transmission, Nevada Power Company's transmission function employees are required to function independently of Nevada Power Company's marketing function employees.

Accordingly, references herein to the "Transmission Provider" relate to the owner/operator of the Transmission System, and for so long as the Buyer is the same legal entity as such owner/operator of the Transmission System, then references to the "Transmission Provider" herein will relate to Nevada Power Company in its capacity as the owner/operator of the Transmission System, and references to the "Buyer" herein will relate to Nevada Power Company outside of and separate from its capacity as the owner/operator of the Transmission System.

10. PLANNED OUTAGES

10.1 Supplier shall request and obtain Buyer's prior written approval, which approval shall not be unreasonably withheld, before conducting any non-forced outage of the Generating Facility or reducing the capability of the Generating Facility to deliver the Supply Amount (all hereinafter referred to as "Planned Outages") so as to minimize the impact on the availability of the Generating Facility. Supplier shall only schedule Planned Outages during the months of March, April, October and November, unless otherwise approved by Buyer.

10.2 Planned Outages will be scheduled and conducted in accordance with the following:

10.2.1 Within ninety (90) days prior to the Commercial Operation Date and on or before October 1 of each Contract Year, Supplier shall provide Buyer with a schedule of proposed Planned Outages for the upcoming calendar year or Contract Year, as applicable. The proposed Planned Outages schedule will designate the hours and amount (in MWs) in which the Generating Facility output will be reduced in whole or in part. Each proposed schedule shall include all applicable information, including the following: month, day and time of requested outage, facilities impacted, duration of outage, purpose of outage, and other relevant information. The total combined hours of Planned Outages in any Contract Year shall not exceed four percent (4%) of the MWhs comprising the Annual Supply Amount (prorated for the Stub Period, if any) unless otherwise approved by Buyer.

10.2.2 Buyer shall promptly review Supplier's proposed schedule and shall either require modifications or approve the proposed schedule within thirty (30) days of Buyer's receipt of such schedule. Product not delivered to Buyer during periods of Planned Outages, up to the MWs specified, (a) will comprise Excused Product Amount to the extent such Planned Outages are conducted in accordance with the Planned Outage schedule approved by Buyer in accordance with this Article 10, and (b) will not comprise Excused Product Amount to the extent any outage period or MWs exceed its approved schedule, or is not approved by Buyer, provided that changes to the approved schedule may be requested by either Party and each Party shall make reasonable efforts to accommodate such changes, provided further that Buyer shall have no obligation to agree to Supplier's revisions to the approved Planned Outage(s) schedule.

10.2.3 Regardless of any prior approval of a Planned Outage, Supplier shall not start a Planned Outage on the Generating Facility without confirming the approved Planned Outage with Buyer's Operating Representative five (5) Business Days prior to the start of such Planned Outage.

10.2.4 If Buyer requests that Supplier not institute a Planned Outage as scheduled, for reasons other than Force Majeure or Emergency, Supplier may present a reasonable estimate of costs expected to be incurred as a result of the Supplier not instituting the Planned Outage. If Buyer agrees to the estimated costs, Supplier shall be required not to institute the Planned Outage, and Buyer shall reimburse Supplier for its documented out-of-pocket costs actually incurred by Supplier in connection with not instituting such Planned Outage (not to exceed the estimated costs that had been provided to Buyer). Any Planned Outage that is not instituted pursuant to this Section 10.2.4 will be rescheduled to occur in the same Contract Year in which it was originally scheduled, at a time mutually agreeable to the Parties in their reasonable discretion.

11. REPORTS; OPERATIONAL LOG

11.1 Copies of Communications. Supplier shall promptly provide Buyer with copies of any orders, decrees, letters or other written communications to or from any Governmental Authority asserting or indicating that Supplier or its Generating Facility is in violation of Laws which relate to Supplier or operation or maintenance of the Generating Facility. Supplier shall keep Buyer apprised of the status of any such matters.

11.2 Notification of Generating Facility Regulatory Status. Supplier shall notify Buyer of the regulatory status of the Generating Facility as an EWG or QF no later than ninety (90) days prior to the Operation Date, and will provide Buyer with evidence documenting receipt of the required regulatory approvals related to such designation (as such approvals are set forth in Exhibit 10). Following the Operation Date, Supplier shall notify Buyer, as soon as practicable, of any changes in regulatory status of the Generating Facility, and will provide Buyer with evidence documenting receipt of the required regulatory approvals related to such changed regulatory status (as such approvals are set forth in Exhibit 10).

11.3 Notices of Change in Generating Facility. In addition to any consent required pursuant to Section 8.6, Supplier shall provide notice to Buyer as soon as practicable prior to any temporary or permanent change to the performance, operating characteristics, or major generation components (such as turbines, generators, inverters or similar equipment, as applicable) of the Generating Facility. Such notice shall describe any changes, expected or otherwise, to the total capacity of the Generating Facility, the rate of production and delivery of Energy, interconnection and transmission issues, and such additional information as may be required by Buyer.

11.4 Project Reports and Project Review Meetings.

11.4.1 Prior to the Commercial Operation Date. Supplier shall provide to Buyer in a quarterly project report, which shall include the following: status in obtaining Project Milestones; progress in obtaining any approvals or certificates in connection with achieving the Commercial Operation Date; and a discussion of any foreseeable disruptions or delays. The quarterly project reports will cover calendar quarters (January through March, April through June, July through September, and October through December, as applicable) and will be provided to Buyer no later than thirty (30) days after expiration of the applicable calendar quarter. The Parties shall conduct meetings every six (6) months (or more frequently if requested by Buyer) to review this data and any information related to Supplier's completion of or progress toward the Project Milestone activities listed in Exhibit 6. In addition to any other requirements for Commercial Operation under this Agreement, Supplier shall (a) provide notice to Buyer of its best estimate of the projected Operation Date and Commercial Operation Date on the PUCN Approval Date, (b) notify Buyer as soon as Supplier becomes aware of any changes in such projected dates, and (c) shall coordinate with Buyer regarding the commencement of operation of the Generating Facility. In addition to the foregoing, Supplier will provide Buyer with such other operational or technical data as Buyer may reasonably request and as may be reasonably necessary to determine Supplier's compliance with its obligations hereunder and/or its progress toward Commercial Operation.

11.4.2 After Commercial Operation Date. After the Commercial Operation Date, Supplier shall provide to Buyer on or before the 10th day of each month with respect to the prior month, all data from the Weather Meter in a format then suitable to be uploaded directly to the then current version of SAM, and no later than January 31st and July 15th of each calendar year throughout the Term of this Agreement, in electronic format, a report which shall include all pertinent information in connection with Supplier's Generating Facility, including without limitation: any available site condition reports; all reporting information maintained in the operational log and any other SCADA data from the Generating Facility; and any reports pertaining to the Generating Facility fuel source or resource (e.g., solar data) and such other data and reports as may be reasonably requested by Buyer and which should be maintained by Supplier in accordance with Good Utility Practice for the relevant technology.

11.4.3 Operations Log. Supplier shall maintain in accordance with Good Utility Practice an operations log(s), which shall include, without limitation: (a) all planned and unplanned outages, alarms, circuit breaker trip operations, partial deratings of equipment, mechanical impairments, defects or unavailability with respect to generating equipment; (b) the cause (including any root cause analysis undertaken) and remediation undertaken by Supplier with respect to the events listed in (a); (c) the Delivered Amounts for the Stub Period and each Contract Year, and (d)

any other significant event or information related to the operation of the Generating Facility or the delivery of Energy. The operations log(s) shall be available for inspection by Buyer upon forty-eight (48) hours notice together with all data maintained by Supplier as support for such log(s). Supplier shall be responsible for maintaining sufficient evidentiary support in order to document the information contained in such operation log(s).

11.5 Financial Information. Upon Buyer's written request, Supplier shall, within thirty (30) days of such request, provide Buyer with copies of Supplier's most recent quarterly and annual financial statements, which financial statements shall be prepared in accordance with generally accepted accounting principles.

12. COMMUNICATIONS

12.1 Supplier's Operating Representative shall be available to address and make decisions on all operational matters under this Agreement on a twenty-four (24) hour, seven (7) day per week basis. Supplier shall, at its expense, provide a communication method with Buyer's Operating Representative at Buyer's operations center and with Buyer's scheduling personnel, as listed on Exhibit 4, to maintain communications between personnel at the Generating Facility and Buyer's Operating Representative, Buyer's schedulers and the Control Area Operator at all times.

12.2 In connection with meeting its obligations pursuant to this Article 12, Supplier shall provide at its expense:

12.2.1 For the purposes of telemetering, a telecommunications circuit from the Generating Facility to Buyer's operations center, or other readily accessible real-time performance monitoring (e.g. a web-based performance monitoring system);

12.2.2 Two (2) dedicated ringdown voice telephone lines for purposes of accessing Buyer's dial-up metering equipment and for communications with Buyer's operations center; and

12.2.3 Equipment to transmit to and receive telecopies and email from Buyer and the Control Area Operator, including cellular telephones.

13. SCHEDULING NOTIFICATION

13.1 Scheduling Notification. Supplier shall provide to Buyer's scheduling Operating Representative notices containing information including Supplier's good faith daily and hourly forecast of the Delivered Amount, Generating Facility Planned Outages, Derating, other outages and similar changes that may affect the Delivered Amount.

13.2 Availability Notice Procedures.

13.2.1 No later than 0500 PPT each day or as otherwise specified by Buyer consistent with Good Utility Practice, Supplier shall deliver to Buyer's Operating Representative an Availability Notice in the form set forth in Exhibit 8. The Availability Notice will cover WECC ISAS daily preschedule calendar and WECC ISAS business practices for day-ahead energy or such other period specified by Buyer consistent with Good Utility Practice.

13.2.2 Supplier shall update the Availability Notice and notify Buyer's Operating Representatives as soon as practical after becoming aware (a) of an expected Derating or (b) that Excess Energy is expected.

13.2.3 The information in the Availability Notice, including the forecasted Delivered Amount and Excess Energy, will be Supplier's good faith forecast and will indicate any Delivery Hour for which the Delivered Amount is expected to be less than the Supply Amount or any Delivery Hour for which Excess Energy is expected.

13.2.4 In the event of a Derating, Supplier shall provide: (a) the extent, if any, to which the Derating is attributable to a Planned Outage; (b) the magnitude of the Derating; (c) the hours during which the Derating is expected to apply; and (d) the cause of the Derating.

14. COMPLIANCE

14.1 Each Party shall comply with all relevant Laws (including but not limited to compliance to ensure that, subject to the provisions of Section 3.3.2, the Generating Facility is at all times a Renewable Energy System and Supplier is at all times in compliance with all requirements of a renewable energy generator as set forth in the Renewable Energy Law), and shall, at its sole expense, maintain in full force and effect all relevant permits, authorizations, licenses and other authorizations material to the maintenance of its facilities and the performance of obligations under this Agreement. Each Party and its representatives shall comply with all relevant requirements of the Control Area Operator, Transmission Provider and each Governmental Authority to ensure the safety of its employees and the public.

14.2 Buyer and Supplier shall perform, or cause to be performed, their obligations under this Agreement in all material respects in accordance with Good Utility Practice.

15. APPROVALS

15.1 Condition Precedent. Unless Buyer waives its right to terminate this Agreement pursuant to Section 15.3, each Party's performance of its respective obligations under Articles 3, 4, 5, 6, 7, 8, 9, 10, 11, 12, 13, and 14 of this Agreement is subject to Buyer obtaining the PUCN approval described in Section 15.2 in form and substance satisfactory to Buyer.

15.2 PUCN Approval. Within one hundred twenty (120) days after the Effective Date and in accordance with the requirements of NRS and NAC, Buyer shall submit this Agreement to the PUCN for:

15.2.1 A determination that the terms and conditions of this Agreement are just and reasonable; and

15.2.2 A determination that the costs of purchasing Energy and Portfolio Energy Credits under this Agreement are prudently incurred and that the Buyer may recover all just and reasonable costs of Energy and Portfolio Energy Credits purchased under this Agreement.

15.3 Failure to Obtain Approval; Conditions of Approval. If PUCN fails to grant approval or acceptance of this Agreement on or before the PUCN Approval Deadline, including all items provided in Section 15.2, then Buyer shall have the right to terminate this Agreement upon ten (10) Business Days written notice to Supplier. If PUCN grants the approval or acceptance of this Agreement and the conditions of such approval or acceptance are not reasonably acceptable to Buyer, then Buyer shall have the right to terminate this Agreement within thirty (30) days of such PUCN approval or acceptance upon ten (10) Business Days written notice to Supplier.

15.4 INTENTIONALLY OMITTED.

15.5 Cooperation. If requested by Buyer, Supplier shall cooperate with Buyer as Buyer may deem necessary in order to obtain any regulatory approval (including PUCN and FERC approval) in connection with this Agreement, including, without limitation, providing affidavits, providing timely responses to data requests of such regulatory bodies, intervening in any relevant dockets, and requesting "commenter" or "intervener" status in any relevant docket. Each Party agrees to notify the other Party of any significant developments in obtaining any approval in connection with achieving Commercial Operation of the Generating Facility, including PUCN approval. Each Party shall use reasonable efforts to obtain such required approvals and shall exercise due diligence and shall act in good faith to cooperate with and assist each other in acquiring each approval necessary to effectuate this Agreement.

16. SECURITY

16.1 Development Security. As a condition of Buyer's execution of and continuing obligations under this Agreement, Supplier shall provide to Buyer, as security for the performance of Supplier's obligations hereunder, either (a) a letter of credit from a Qualified Financial Institution in the form attached hereto as Exhibit 17 or (b) a cash deposit, in either case, in an amount equal to Seven Hundred Thirty Nine Thousand and One Hundred Dollars ($739,100) (the "Development Security"); provided, however, that if the Annual Supply Amount is increased pursuant to Section3.7.1, then the amount of the required Development Security will be increased to be an amount that is equal to the product of (i) the total number of MWh comprising the Annual Supply Amount as so adjusted, and (ii) USD $10.00. The Development Security shall be posted within five (5) Business Days after the Effective Date. Buyer shall have the right to draw upon the Development Security, at Buyer's sole discretion, (a) as a non-exclusive remedy available to Buyer under Article 23, (b) in the event Supplier fails to achieve Commercial Operation by the Commercial Operation Deadline (or the extended Commercial Operation Deadline if Supplier has met the requirements of Section 8.4.1), (c) if Supplier fails to make any payments owing under this Agreement, or (d) if Supplier fails to reimburse Buyer for costs, including Replacement Costs, PC Replacement Costs and Penalties, that Buyer has incurred or may incur as a result of Supplier's failure to perform its obligations under this Agreement. Any such drawing on the Development Security by Buyer (except for a drawing in full for Supplier's failure to achieve Commercial Operation by the Commercial Operation Date, resulting in termination of this Agreement) shall give rise to an obligation of Supplier to replenish the Development Security to its original amount (or increased amount, if applicable) within five (5) Business Days. In the event that no amounts are due and owing by Supplier to Buyer under this Agreement and Supplier has provided the Operating Security to Buyer, the Development Security shall be released to Supplier upon the earlier of (x) termination of this Agreement in accordance with its terms or (y) on the fifteenth (15th) Business Day after the Generating Facility achieves Commercial Operation. Upon the consent of Buyer, Supplier may apply and maintain the Development Security as a portion of Operating Security required to be provided by Supplier pursuant to Section 16.2. Further, in the event that this Agreement is terminated prior to the Commercial Operation Date, and at the time of such termination no amounts are then due and owing by Supplier to Buyer, the Development Security shall be released to Supplier within five (5) Business Days after the effectiveness of any such termination.

16.2 Operating Security. As a condition of Buyer's continuing obligation under this Agreement, Supplier shall provide to Buyer, as security for the performance of Supplier's obligations hereunder, either (a) a letter of credit from a Qualified Financial Institution in the form attached hereto as Exhibit 17 or (b) a cash deposit, in either case, in an amount equal to One Million Four Hundred Seventy Eight Thousand and Two Hundred Dollars ($1,478,200.00) (the "Operating Security"); provided, however, that if the Annual Supply Amount is increased pursuant to Section 3.7.1, then the amount of the required Operating Security will be increased to be an amount that is equal to the product of (i) the total number of

MWh comprising the Annual Supply Amount as so adjusted, and (ii) USD $20.00. The Operating Security shall be posted no later than five (5) Business Days after the Generating Facility achieves Commercial Operation. Buyer shall have the right to draw upon the Operating Security, at Buyer's sole discretion, (a) as a non-exclusive remedy available to Buyer under Article 23, (b) in the event Supplier fails to make any payments owing under this Agreement or (c) if Supplier fails to reimburse Buyer for costs, including Replacement Costs, PC Replacement Costs and Penalties that Buyer has incurred or may incur as a result of Supplier's failure to perform under this Agreement. Any such drawing on the Operating Security by Buyer shall give rise to an obligation of Supplier to replenish the Operating Security to its original amount (or increased amount, if applicable) within five (5) Business Days. In the event that no amounts are due and owing by Supplier to Buyer under this Agreement, the Operating Security shall be released to Supplier upon the earlier of the fifteenth (15th) Business Day after (x) termination of this Agreement in accordance with its terms or (y) the expiration of the Term.

16.3 Letters of Credit: With respect to any letter of credit posted by Supplier as Development Security or Operating Security: (a) no later than thirty (30) days prior to the expiration date of any letter of credit, Supplier shall cause the letter of credit to be renewed or replaced with another letter of credit in an equal amount; (b) in addition to the conditions specified in Sections 16.1 and 16.2, Buyer shall have the right to draw on such letter of credit, at Buyer's sole discretion (i) if such letter of credit has not been renewed or replaced at least thirty (30) days prior to the date of its expiration or (ii) if the Credit Rating of the financial institution that issued such letter of credit has been downgraded to below the Minimum Credit Rating and Supplier has not caused a replacement letter of credit to be issued for the benefit of Buyer within five (5) Business Days of such downgrade pursuant to Section 16.4.

16.4 Maintaining Security. If at any time after the Effective Date of this Agreement, Standard & Poor's, Moody's or another nationally recognized firm downgrades the Credit Rating of the financial institution issuing a letter of credit pursuant to this Agreement to below the Minimum Credit Rating, then Supplier shall (a) provide Buyer with written notice of such downgrade within two (2) Business Days of Supplier being notified of any such downgrade and (b) cause a replacement letter of credit satisfying the conditions of Section 16.3 to be issued in favor of Buyer within five (5) Business Days of such downgrade. In the event such a downgrade also constitutes an Event of Default pursuant to Article 23, then the requirements of this Section 16.4 are in addition to, and not in lieu of, the provisions of Article 23. Supplier shall take all necessary action and shall be in compliance with Section 16.1 and/or Section 16.2, as the case may be, within five (5) Business Days of the downgrade.

16.5 No Interest on Supplier Security. Supplier shall not earn or be entitled to any interest on any security provided pursuant to this Article 16, including cash amounts deposited pursuant to Section 16.1 or 16.2.

16.6 Waiver of Buyer Security. Supplier hereby waives any and all rights it may have, including rights at law or otherwise, to require Buyer to provide financial assurances or security (including, but not limited to, cash, letters of credit, bonds or other collateral) in respect of its obligations under this Agreement.

17. INDEMNIFICATION

17.1 Indemnification for Losses. A Party to this Agreement (the "Indemnifying Party") shall indemnify, defend and hold harmless, on an After Tax Basis, the other Party, its parent and Affiliates, and each of their officers, directors, employees, attorneys, agents and successors and assigns (each an "Indemnified Party") from and against any and all Losses arising out of, relating to, or resulting from the Indemnifying Party's breach of, or the performance or non-performance of its obligations under this Agreement (including reasonable attorneys' fees and costs); provided, however, that no Party shall be indemnified hereunder for any Loss to the extent resulting from its own gross negligence, fraud or willful misconduct. Supplier’s obligation to indemnify Buyer under this Section 17.1 with respect to any Penalty imposed by a Governmental Authority arising out of Buyer’s failure to satisfy a Portfolio Standard in respect of any applicable period shall (i) be conditioned on the occurrence of a PC Shortfall hereunder and (ii) will be limited to the portion of such Penalty that is directly attributable to Supplier's shortfall amount. Buyer will act in good faith and in a commercially reasonable manner to mitigate such Penalties.

17.1.1 In furtherance of the foregoing indemnification and not by way of limitation thereof, the Indemnifying Party hereby waives any defense it otherwise might have against the Indemnified Party under applicable workers' compensation laws.

17.1.2 In claims against any Indemnified Party by an agent of the Indemnifying Party, or anyone directly or indirectly employed by them or anyone for whose acts the Indemnifying Party may be liable, the indemnification obligation under this Article 17 shall not be limited by a limitation on amount or type of damages, compensation or benefits payable by or for the Indemnifying Party or a subcontractor under workers' or workmen's compensation acts, disability benefit acts or other employee benefit acts.

17.2 No Negation of Existing Indemnities; Survival. Each Party's indemnity obligations under this Agreement shall not be construed to negate, abridge or reduce other rights or obligations, which would otherwise exist at Law or in equity. The obligations contained herein shall survive any termination, cancellation, expiration, or suspension of this Agreement to the extent that any third-party claim is commenced during the applicable statute of limitations period.

17.3 Indemnification Procedures.

17.3.1 Any Indemnified Party seeking indemnification under this Agreement for any Loss shall give the Indemnifying Party notice of such Loss promptly but in any event on or before thirty (30) days after the Indemnified Party's actual knowledge of such claim or action. Such notice shall describe the Loss in reasonable detail, and shall indicate the amount (estimated if necessary) of the Loss that has been, or may be sustained by, the Indemnified Party. To the extent that the Indemnifying Party will have been actually and materially prejudiced as a result of the failure to provide such notice, the Indemnified Party shall bear all responsibility for any additional costs or expenses incurred by the Indemnifying Party as a result of such failure to provide notice.

17.3.2 In any action or proceeding brought against an Indemnified Party by reason of any claim indemnifiable hereunder, the Indemnifying Party may, at its sole option, elect to assume the defense at the Indemnifying Party's expense, and shall have the right to control the defense thereof and to determine the settlement or compromise of any such action or proceeding. Notwithstanding the foregoing, an Indemnified Party shall in all cases be entitled to control its own defense in any action if it:

17.3.2.1 May result in injunctions or other equitable remedies with respect to the Indemnified Party which would affect its business or operations in any materially adverse manner;

17.3.2.2 May result in material liabilities which may not be fully indemnified hereunder; or

17.3.2.3 May have a Material Adverse Effect to Indemnified Party (including a Material Adverse Effect on the tax liabilities, earnings, ongoing business relationships or regulation of the Indemnified Party) even if the Indemnifying Party pays all indemnification amounts in full.

17.3.3 Subject to Section 17.3.2, neither Party may settle or compromise any claim for which indemnification is sought under this Agreement without the prior written consent of the other Party; provided, however, said consent shall not be unreasonably withheld, conditioned or delayed.

18. LIMITATION OF LIABILITY

18.1 Responsibility for Damages. Except where caused by the other Party's negligence or willful misconduct, each Party shall be responsible for all physical damage to or destruction of the property, equipment and/or facilities owned by it, and each Party hereby releases the other Party from any reimbursement for such damage or destruction.

18.2 Limitation on Damages. To the fullest extent permitted by Law and notwithstanding other provisions of this Agreement, in no event shall a Party be liable to the other Party, whether in contract, warranty, tort, negligence, strict liability, or otherwise, for special, indirect, incidental, multiple, consequential (including lost profits or revenues, business interruption damages and lost business opportunities), exemplary or punitive damages related to, arising out of, or resulting from performance or nonperformance of this Agreement (unless due to the willful or intentional breach of this Agreement by such Party, in which case the limitation shall not apply). For purposes of clarification, Replacement Costs, PC Replacement Costs or payment made by either Party to satisfy Penalties or payments owing under Sections 3.5, 3.6, 3.8, 7.5, 8.4, 8.5, 14.1, 16.1, 16.2, 17.1, 18.1, 20.4, 26.1 shall not be considered special, indirect, incidental, multiple, punitive, consequential or incidental damages under this Section 18.2. In addition, this limitation on damages shall not apply with respect to claims brought by third parties for which a Party is entitled to indemnification under this Agreement.

18.3 Survival. The provisions of this Article 18 shall survive any termination, cancellation, expiration, or suspension of this Agreement.

19. FORCE MAJEURE

19.1 Excuse. Subject to Section 19.4, neither Party shall be considered in default under this Agreement for any delay or failure in the performance of its obligations under this Agreement (including any obligation to deliver or accept Product) if such delay or failure is due to an event of Force Majeure.

19.2 Definition. "Force Majeure" means, subject to Section 19.3, any of the following enumerated events that occur subsequent to the Effective Date and before the termination or expiration of the Term of this Agreement and that delays or prevents a Party's performance of its obligations under this Agreement, but only to the extent that (a) such event of Force Majeure is not attributable to fault or negligence on the part of that Party, (b) such event of Force Majeure is caused by factors beyond that Party's reasonable control, (c) despite taking all reasonable technical and commercial precautions and measures to prevent, avoid, mitigate or overcome such event and the consequences thereof, the Party affected has been unable to prevent, avoid, mitigate or overcome such event or consequences and (d) such Party has satisfied the requirements of Section 19.4:

19.2.1 Acts of God such as storms, hurricanes, floods, lightning, fire, explosion, quarantine, earthquakes, or other natural disasters;

19.2.2 Sabotage or destruction by a third party of facilities and equipment relating to the performance by the affected Party of its obligations under this Agreement;

19.2.3 War, riot, acts of a public enemy or other civil disturbance;

19.2.4 Strike, walkout, lockout or other significant labor dispute; or

19.2.5 Action or inaction of a Governmental Authority (excluding any amendment, modification or other change, enacted after the Effective Date, to any Law) that (a) prevents the Transmission Provider from completing modifications to the Interconnection Facilities or Transmission System to connect to the Generating Facility, (b) prevents Supplier from operating the Generating Facility, or (c) prevents the Buyer from taking delivery of the Supply Amount from Supplier.

19.3 Exclusions. None of the following shall constitute an event of Force Majeure:

19.3.1 Economic hardship of either Party;

19.3.2 The non-availability of the resource supply to generate electricity from the Generating Facility, including non-availability of the resource supply due to weather or climate conditions;

19.3.3 A Party's failure to obtain any permit, license, consent, agreement or other approval from a Governmental Authority, except to the extent it is caused by an event listed in Sections 19.2.1 or 19.2.3; and

19.3.4 A Party's failure to meet a Project Milestone, except to the extent it is caused by an event listed in Sections 19.2, excluding Section 19.2.5.

19.4 Conditions. In addition to the conditions set forth in Section 19.2, a Party may rely on a claim of Force Majeure to excuse its performance only to the extent that such Party:

19.4.1 Provides prompt notice of such Force Majeure event to the other Party, giving an estimate of its expected duration and the probable impact on the performance of its obligations under this Agreement;

19.4.2 Exercises all reasonable efforts to continue to perform its obligations under this Agreement;

19.4.3 Expeditiously takes action to correct or cure the event or condition excusing performance so that the suspension of performance is no greater in scope and no longer in duration than is dictated by the problem; provided, however, that settlement of strikes or other labor disputes will be deemed to be completely within the sole discretion of the Party affected by such strike or labor dispute;

19.4.4 Exercises all reasonable efforts to mitigate or limit damages to the other Party; and

19.4.5 Provides prompt notice to the other Party of the cessation of the event or condition giving rise to its excuse from performance.

20. DISPUTES

20.1 Dispute or Claim. Any cause of action, claim or dispute which either Party may have against the other arising out of or relating to this Agreement, including, but not limited to, the interpretation of the terms hereof or any Laws or regulations that affect this Agreement, or the transactions contemplated hereunder, or the breach, termination or validity thereof ("Dispute") shall be submitted in writing to the other Party. The written submission of any Dispute shall include a concise statement of the question or issue in dispute together with a statement listing the relevant facts and appropriate supporting documentation.

20.2 Good Faith Resolution. The Parties agree to cooperate in good faith to expedite the resolution of any Dispute. Pending resolution of a Dispute, the Parties shall proceed diligently with the performance of their obligations under this Agreement.

20.3 Informal Negotiation. The Parties shall first attempt in good faith to resolve any Dispute through informal negotiations by the Operating Representatives or Contract Representatives and senior management of each Party.

20.4 Jurisdiction, Venue. Each Party hereto irrevocably (a) submits to the exclusive jurisdiction of the federal and state courts located in the County of Clark, State of Nevada; (b) waives any objection which it may have to the laying of venue of any proceedings brought in any such court; and (c) waives any claim that such proceedings have been brought in an inconvenient forum.

20.5 Recovery of Costs and Attorneys' Fees. In the event of a dispute arising from or relating to this Agreement, whether or not an action is commenced in any court to enforce any provision or for damages by reason of any alleged breach of this Agreement, then the prevailing Party will be entitled to recover from the other Party all costs and attorneys' fees reasonably incurred in resolving the dispute. For purposes hereof, the "prevailing" Party need not prevail on every issue involved in the dispute, but only on the main issue giving rise to the dispute.

21. NATURE OF OBLIGATIONS

21.1 Relationship of the Parties. The provisions of this Agreement shall not be construed to create an association, trust, partnership, or joint venture; or impose a trust or partnership duty, obligation, or liability or agency relationship between the Parties.

21.2 No Public Dedication. By this Agreement, neither Party dedicates any part of its facilities nor the service provided under this Agreement to the public.

22. ASSIGNMENT

22.1 Buyer Assignment. Buyer may assign this Agreement as follows:

22.1.1 Buyer may assign this Agreement or assign or delegate its rights and obligations under this Agreement, in whole or in part, without Supplier's consent, if such assignment is made to: (a) Sierra Pacific Power Company; (b) where such assignment does not occur by operation of law, any successor to Buyer provided such successor (i) is a public utility holding a certificate of public convenience and necessity granted by the PUCN pursuant to NRS Chapter 704 and (ii) does not have a lower Credit Rating than Buyer had on the Effective Date; (c) a legally authorized governmental or quasi-governmental agency charged with providing retail electric service in Nevada (provided that, at the time of assignment, such assignee does not have a lower Credit Rating than Buyer had on the Effective Date); or (d) as otherwise required by Law.

22.1.2 Buyer also may assign this Agreement, in whole or in part, without Supplier's consent, to a party or Person whose Credit Rating, as published by either Relevant Rating Agency, is equal or superior to the Minimum Credit Rating as of the time of assignment.

22.1.3 Buyer shall provide Supplier with written notice of any such assignment.

22.2 Supplier Assignment. Supplier may, without the consent of Buyer (and without relieving itself from liability hereunder) (a) transfer, pledge, encumber or assign this Agreement or the account, revenues or proceeds hereof in connection with any financing or other financial arrangements for the Generating Facility and (b) transfer or assign this Agreement to any of its Affiliates in connection with a transfer of the Generating Facility to such Affiliate; provided, that Supplier provides Buyer prior notice of any such transfer or assignment and, with respect to any transfer to an Affiliate of Supplier, (i) the creditworthiness of such Affiliate is equal to or superior to the creditworthiness of Supplier as of the Effective Date, as determined by Buyer in its reasonable discretion, and (ii) such Affiliate enters into an assignment and assumption agreement, in form and substance satisfactory to Buyer, pursuant to which such Affiliate assumes all of Supplier's obligations hereunder and otherwise agrees to be bound by the terms of this Agreement. Supplier agrees that it will provide written notice to Buyer (and, if required, the PUCN Regulatory Operations Staff, and the State of Nevada Attorney General's Bureau of Consumer Protection) of any assignment of this Agreement by Supplier, together with information supporting the permissible nature of the assignment, prior to the effective date of any such assignment.

22.3 Mutual Prohibition. Except as stated above, neither this Agreement nor any of the rights, interests, or obligations hereunder shall be assigned by either Party, including by operation of Law, without the prior written consent of the other Party, which consent shall not be unreasonably withheld. Any assignment of this

Agreement in violation of the foregoing shall be, at the option of the non-assigning Party, void.

22.4 Liability After Assignment. A Party's assignment or transfer of rights or obligations pursuant to this Article 22 (other than Section 22.2) of this Agreement shall relieve said Party from any liability and financial responsibility for the performance thereof arising after any such transfer or assignment, provided such transferee enters into an assignment and assumption agreement, in form and substance satisfactory to the other Party, pursuant to which such transferee assumes all of the assigning or transferring Party's obligations hereunder and otherwise agrees to be bound by the terms of this Agreement.

22.5 Transfers of Ownership. Subject to satisfaction of the requirements of Article 6:

22.5.1 Supplier shall not sell, transfer, assign or otherwise dispose of its ownership interest in the Generating Facility to any third party absent (a) a transfer of this Agreement to such third party, (b) Supplier entering into an assignment and assumption agreement, in form and substance satisfactory to Buyer, with such third party pursuant to which such third party assumes all of Supplier's obligations hereunder and otherwise agrees to be bound by the terms of this Agreement, and (c) Buyer's prior written approval, not to be unreasonably withheld, of such third party. Notwithstanding the foregoing, this Section 22.5.1 shall not apply or restrict (i) the transfer of the Generating Facility, directly or indirectly, to Supplier's Lenders in connection with the financing (including any sale-leaseback) of the Generating Facility, or (ii) any sale, transfer, assignment or disposal of the Generating Facility to an Affiliate of Supplier so long as the requirements for the assignment of the Agreement to an Affiliate in Section 22.2 are satisfied.

22.5.2 Fotowatio Renewable Ventures, Inc. shall not cease to own, directly or indirectly, less than fifty percent (50%) of the outstanding equity interests in Supplier (excluding any such interests held by Supplier's Lenders or their successors), absent Buyer's prior written approval, not to be unreasonably withheld, conditioned or delayed.

22.6 Assignee Obligations. Supplier shall procure and deliver to Buyer an undertaking, enforceable by Buyer, from each party possessing a security interest in the Generating Facility to the effect that, if such party forecloses on its security interest, (a) it will assume Supplier's obligations under and otherwise be bound by the terms of this Agreement, and (b) it will not sell, transfer or otherwise dispose of its interest in the Generating Facility to any third party absent an agreement from such third party to assume Supplier's obligations under and otherwise be bound by the terms of this Agreement.

22.7 Successors and Assigns. This Agreement and all of the provisions hereof are binding upon, and inure to the benefit of, the Parties and their respective permitted successors and permitted assigns.

22.8 Collateral Assignment by Supplier. In the event that Supplier intends to transfer, pledge, encumber or collaterally assign this Agreement to Supplier's Lenders, Supplier shall provide written notice to Buyer of such intended transfer, pledge, encumbrance or assignment, including the address of Supplier's Lender(s). Any negotiation of documentation required in connection with a collateral assignment or other financing activity of Supplier shall be at the sole cost and expense of Supplier, and Supplier shall reimburse Buyer for all documented third-party costs in connection with such activities. As a condition precedent to the effectiveness of any such transfer, pledge, encumbrance or collateral assignment, Buyer and Supplier and Supplier's Lenders shall have agreed upon the terms of a consent to collateral assignment of this Agreement, which consent to collateral assignment shall be in form and substance reasonably acceptable to Buyer, Supplier and Supplier's Lenders, and shall contain representations and warranties, subject to reasonable qualifications and assumptions, and address the following provisions:

22.8.1 Except to the extent permitted by the terms of the consent to collateral assignment, the Parties shall not amend or modify this Agreement in any material respect without the prior written consent of Supplier's Lender(s);

22.8.2 Prior to exercising its right to terminate this Agreement as a result of an Event of Default by Supplier, Buyer shall give notice of such Event of Default by Supplier to any of Supplier's Lender(s) which Buyer has been provided written notice of;

22.8.3 Except to the extent permitted by the terms of the consent to collateral assignment, Supplier's Lender(s) shall have the right, but not the obligation, to cure an Event of Default on behalf of Supplier in accordance with the provisions of this Agreement, provided that Supplier's Lender(s) shall be provided an additional forty-five (45) days, from the end of the Cure Period provided pursuant to Section 23.2, to effect a cure of such Event of Default;

22.8.4 An agreement, enforceable by Buyer, from each of Supplier's Lenders that:

22.8.4.1 Supplier's Lenders shall receive prior notice of and the right to approve material amendments to the Agreement, which approval shall not be unreasonably withheld, delayed, or conditioned;

22.8.4.2 If Supplier's Lenders directly or indirectly, take possession of, or title to the Generating Facility (including possession by a receiver or title by foreclosure or deed in lieu of foreclosure), then Supplier's Lenders shall assume all of Supplier's obligations under this Agreement, provided that Supplier's Lenders shall have no personal liability for any monetary obligations of Supplier under this Agreement which are due

and owing to Buyer as of the assumption date; provided, however, that prior to such assumption, if Buyer advises Supplier's Lenders that Buyer will require that Supplier's Lenders cure (or cause to be cured) any Supplier Event of Default hereunder existing as of the possession date (irrespective of when such Event of Default occurred) in order to avoid the exercise by Buyer (in its sole discretion) of Buyer's right to terminate the Agreement in respect of such Event of Default, then Supplier's Lenders at their option; and in their sole discretion, may elect to either: (a) cause such Event of Default to be cured; or (b) not assume this Agreement; and

22.8.4.3 If Supplier's Lenders elect to sell or transfer the Generating Facility (after directly or indirectly taking possession of, or title to, the Generating Facility) or if the sale of the Generating Facility occurs through the actions of Supplier's Lenders (including, a foreclosure sale where a third party is the buyer, or otherwise), then, as a condition of such sale or transfer, (a) Supplier's Lenders shall cause the buyer or transferee of the Generating Facility to assume all of Supplier's obligations arising under this Agreement and (b) the buyer or transferee of the Generating Facility shall (i) have creditworthiness that is equal to or superior to the creditworthiness of Supplier as of the Effective Date, as determined by Buyer in its reasonable discretion and (ii) have experience in operating renewable energy generating facilities that is equivalent or superior to that of Supplier, or the operator of the Generating Facility if Supplier is not the operator, as determined by Buyer in its reasonable discretion.

22.8.4.4 If this Agreement is rejected or disaffirmed by Supplier pursuant to bankruptcy law or other law affecting creditor’s rights, then upon the request of Supplier’s Lenders delivered to Buyer within forty-five (45) days after any such rejection or disaffirmation, Buyer shall execute and deliver to Supplier’s Lenders or their designee (as approved by Buyer, such approval not to be unreasonably withheld) a new power purchase agreement which shall be for a term equal to the remainder of the Term before giving effect to such rejection or termination and shall contain the same covenants, agreements, terms, provisions and limitations as this Agreement;

22.8.4.5 Upon receipt of a written request from Supplier’s Lenders, Buyer shall make any and all payments due and owing by Buyer under this Agreement to an account designated by Supplier’s Lenders, which payments Supplier agrees will fully satisfy Buyer’s payment obligations under this Agreement to the extent of such payments;

23. DEFAULT AND REMEDIES

23.1 Events of Default. Except to the extent excused due to an event of Force Majeure in accordance with Article 19, an event of default ("Event of Default") shall be deemed to have occurred with respect to a Party (the "Defaulting Party") upon the occurrence of one or more of the following events:

23.1.1 failure to comply with any material obligations imposed upon it by this Agreement or failure of any representation or warranty of a Party to be true in any material respect;

23.1.2 failure to make timely payments due under this Agreement;

23.1.3 failure to comply with the material requirements of the Control Area Operator, Transmission Provider, Buyer, WECC, PUCN, FERC, or any successor thereto where following such directions is required hereunder;

23.1.4 in the case of Supplier, its failure at any time to qualify and maintain the Generating Facility as a Renewable Energy System or itself as a renewable energy producer or similar status under the Renewable Energy Law (subject to the limitations of Section 3.3.2);

23.1.5 in the case of Supplier, its failure to install, operate, maintain or repair the Generating Facility in accordance with Good Utility Practice;

23.1.6 in the case of Supplier, its failure to complete any of the Critical Project Milestones (including, without limitation, Commercial Operation) under the terms of Section 8.2.1, 8.3 (as applicable), 8.4 (as applicable), 8.5 (as applicable), and as set forth in Exhibit 6;

23.1.7 in the case of Supplier, its failure to comply with the provisions of Article 16 (including any replenishment requirement);

23.1.8 in the case of Supplier, for any Biennial Period, the sum of all Delivered Amounts for such period is less than fifty percent (50%) of the Biennial Threshold;

23.1.9 in the case of Supplier, its failure to comply with the provisions of Article 22;

23.1.10 in the case of Supplier, its failure to comply with the provisions of Article 26; and

23.1.11 in the case of Supplier, if Supplier (a) becomes insolvent, files for or is forced into bankruptcy (and in the case of an involuntary bankruptcy, such proceeding is not dismissed within sixty (60) days), (b) makes an assignment for the benefit of creditors, (c) is unable to pay its debts as

they become due or (d) is subject to a similar action or proceeding (and in the case of an involuntary bankruptcy, such proceeding is not dismissed within sixty (60) days).

23.2 Cure Period. There shall be no cure period for an Event of Default under Section 23.1.6 for failure to meet the Commercial Operation Deadline (or extended Commercial Operation Deadline if the conditions of Section 8.4.1 have been met by Supplier), Section 23.1.8, or Section 23.1.11. With respect to all other Events of Default, an Event of Default shall not be deemed to have occurred:

23.2.1 under Section 23.1.2, unless and until the Defaulting Party shall have had a period of ten (10) Business Days from the date the applicable payment was due (a "Payment Cure Period"); and

23.2.2 under any other subsection of Section 23.1 (other than Sections 23.1.6 for failure to meet the Commercial Operation Deadline (or extended Commercial Operation Deadline if the conditions of Section 8.4.1 have been met by Supplier), Section 23.1.8, or Section 23.1.11), unless and until the Defaulting Party shall have had a period of thirty (30) days from the date of receipt of written notice of the occurrence of such failure (a "Performance Cure Period"). A Performance Cure Period may be extended for (a) an additional sixty (60) days for a failure to meet Project Milestones F and G under Section 23.1.6; or (b) an additional ninety (90) days for an Event of Default under any other subsection of Section 23.1 (other than Sections 23.1.6 for failure to meet the Commercial Operation Deadline (or extended Commercial Operation Deadline if the conditions of Section 8.4.1 have been met by Supplier), Section 23.1.8, or Section 23.1.11); provided (i) Supplier can reasonably demonstrate to Buyer that such potential Event of Default was not reasonably capable of being cured within the initial Performance Cure Period, and such potential Event of Default is capable of being cured within the applicable extended Performance Cure Period specified in clause (a) or (b) above, (ii) Supplier is diligently and continuously proceeding to cure such potential Event of Default and (iii) Supplier posts additional security in a form consistent with the provisions of either Section 16.1 or 16.2, and in an amount acceptable to Buyer in its reasonable discretion.

23.3 Remedies. If an Event of Default is not cured by the Defaulting Party during the Cure Period, the Non-Defaulting Party shall be entitled to all legal and equitable remedies that are not expressly prohibited by the terms of this Agreement, including termination of this Agreement as provided in Section 2.3 (provided that, for any Supplier Event of Default as to which Buyer has received written notice from Supplier, such termination right must be exercised by Buyer within three hundred sixty (360) days following the expiration of any applicable Cure Period),

payment of damages, and, in the case of Buyer, drawing upon the Development Security and/or the Operating Security as provided in Article 16.

24. REPRESENTATIONS AND WARRANTIES OF SUPPLIER

The Supplier represents and warrants to Buyer as of the Effective Date as follows, and covenants to Buyer that such representations and warranties will be true and correct for so long as this Agreement is in force and effect:

24.1 Organization. Supplier is a limited liability company duly organized, validly existing and in good standing under the laws of the State of Delaware and has all requisite power and authority to own, lease and/or operate its properties and to carry on its business as is now being conducted. Supplier is duly qualified or licensed to do business as a limited liability company and is in good standing in each jurisdiction in which the property owned, leased or operated by it or the nature of the business conducted by it makes such qualification necessary, except where the failure to be so duly qualified or licensed and in good standing would not have a Material Adverse Effect.

24.2 Authority Relative to this Agreement. Supplier has full authority to execute, deliver and perform this Agreement and to consummate the transactions contemplated herein and has taken all limited liability company actions necessary to authorize the execution, delivery and performance of this Agreement. No other proceedings or approvals on the part of Supplier are necessary to authorize this Agreement. This Agreement constitutes a legal, valid and binding obligation of Supplier enforceable in accordance with its terms except as the enforcement thereof may be limited by applicable bankruptcy, insolvency or similar laws affecting the enforcement of rights generally.

24.3 Consents and Approvals; No Violation. Other than obtaining the Supplier's Required Regulatory Approvals as set out in Exhibit 10, the execution, delivery and performance of this Agreement by Supplier shall not (a) conflict with or result in any breach of any provision of the articles of organization (and/or other governing documents) of Supplier; (b) require any consent, approval, authorization or permit of, or filing with or notification to, any Governmental Authority, except where the failure to obtain such consent, approval, authorization or permit, or to make such filing or notification, could not reasonably be expected to have a Material Adverse Effect or (c) result in a default (or give rise to any right of termination, cancellation or acceleration) under any of the terms, conditions or provisions of any note, bond, mortgage, indenture, agreement, lease or other instrument or obligation to which Supplier or any of its subsidiaries is a party or by which any of their respective assets may be bound, except for such defaults (or rights of termination, cancellation or acceleration) as to which requisite waivers or consents have been obtained.

24.4 Regulation as a Utility. Except as set forth in Exhibit 10, Supplier is not subject to regulation as a public utility or public service company (or similar designation)

by the United States, any State of the United States, any foreign country or any municipality or any political subdivision of the foregoing.

24.5 Availability of Funds. Supplier has, or will have, and shall maintain sufficient funds available to it to perform all obligations under this Agreement and to consummate the obligations contemplated pursuant thereto.

24.6 Interconnection Process; Transmission. Supplier has initiated with the Transmission Provider the process of obtaining the rights to interconnect the Generating Facility to the Transmission System in order to provide for the delivery of Energy to and at the Delivery Point(s). Supplier will deliver firm Energy to the Delivery Point.

24.7 Interconnection Cost Due Diligence. Supplier has conducted due diligence regarding the costs of all facilities necessary to interconnect the Generating Facility to and at the Delivery Point(s) and all such costs are covered by the Product Rates depicted in Exhibit 2A.

24.8 Permits, Authorizations, Licenses, Grants, etc. Supplier has applied or will apply for or has received the permits, authorizations, licenses and grants listed in Exhibits 10 and 11, and that no other permits, authorizations, licenses or grants are required by Supplier to construct and operate the Generating Facility or fulfill its obligations under this Agreement.

24.9 Related Agreements. Supplier has entered into or will enter into all necessary and material agreements as listed in Exhibit 12 related to Supplier's obligations under this Agreement.

24.10 Certification. Subject to the provisions of Section 3.3.2, the Generating Facility qualifies as a Renewable Energy System and Supplier has been and is in compliance with all requirements set forth in the Renewable Energy Law.

24.11 Title. Supplier will own all Product attributable to the Generating Facility and has the right to sell such Product to Buyer. Supplier will convey good title to the Product to Buyer free and clear of any liens or other encumbrances or title defects, including any which would affect Buyer's ownership of any portion of such Product or prevent the subsequent transfer of any portion of such Product by Buyer to a third party.

24.12 Project Site. Supplier either (a) owns the real property comprising the Project Site or (b) has obtained the necessary rights to construct and operate the Generating Facility on the Project Site throughout the Term.

25. REPRESENTATIONS AND WARRANTIES OF BUYER

Buyer represents and warrants to Supplier as of the Effective Date as follows and covenants to Supplier that such representations and warranties will be true and correct for so long as this Agreement is in force and effect:

25.1 Organization; Qualification. Buyer is a corporation duly organized, validly existing and in good standing under the laws of the State of Nevada and has all requisite corporate power and authority to own, lease, and operate its properties and to carry on its business as is now being conducted. Buyer is duly qualified or licensed to do business as a corporation and is in good standing in each jurisdiction in which the property owned, leased or operated by it or the nature of the business conducted by it makes such qualification necessary, except where the failure to be so duly qualified or licensed and in good standing would not have a Material Adverse Effect.

25.2 Authority Relative to this Agreement. Buyer has full corporate authority to execute and deliver this Agreement to which it is a party and to consummate the transactions contemplated herein. The execution and delivery of this Agreement has been duly and validly authorized by Buyer and no other corporate proceedings on the part of Buyer are necessary to authorize this Agreement. This Agreement constitutes a legal, valid and binding obligation of Buyer enforceable in accordance with its terms except as the enforcement thereof may be limited by applicable bankruptcy, insolvency or similar laws affecting the enforcement of rights generally.

25.3 Consents and Approvals; No Violation. Other than obtaining Buyer's Required Regulatory Approvals as set out in Exhibit 9, the execution, delivery and performance of this Agreement by Buyer shall not (a) conflict with or result in any breach of any provision of the articles of organization (or other similar governing documents) of Buyer; (b) require any consent, approval, authorization or permit of, or filing with or notification to, any Governmental Authority, except (i) where the failure to obtain such consent, approval, authorization or permit, or to make such filing or notification, could not reasonably be expected to have a Material Adverse Effect or (ii) for those consents, authorizations, approvals, permits, filings and notices which become applicable to Buyer as a result of specific regulatory status of Buyer (or any of its Affiliates) or as a result of any other facts that specifically relate to the business or activities in which Buyer (or any of its Affiliates) is or proposes to be engaged, which consents, approvals, authorizations, permits, filings and notices have been obtained or made by Buyer; or (c) result in a default (or give rise to any right of termination, cancellation or acceleration) under any of the terms, conditions or provisions of any note, bond, mortgage, indenture, agreement, lease or other instrument or obligation to which Buyer or any of its subsidiaries is a party or by which any of their respective assets may be bound, except for such defaults (or rights of termination, cancellation or acceleration) as to which requisite waivers or consents have been obtained.

26. INSURANCE

26.1 General Requirements. Supplier shall maintain at all times, at its own expense, general/commercial liability, worker's compensation, and other forms of insurance relating to its property, operations and facilities in the manner and

amounts set forth herein from the Effective Date of this Agreement. Supplier shall maintain coverage on all policies written on a "claims made" or "occurrence" basis. If any policy is maintained on a "claims made" form and is converted to an "occurrence form," the new policy shall be endorsed to provide coverage back to a retroactive date acceptable to Buyer.

26.2 Qualified Insurers. Every contract of insurance providing the coverage required herein shall be with an insurer or eligible surplus lines insurer qualified to do business in the State of Nevada and with the equivalent, on a continuous basis, of an "A.M. Best Company Rating" of "A" or better and shall include provisions or endorsements:

26.2.1 Stating that such insurance is primary insurance with respect to the interest of Buyer and that any insurance maintained by Buyer is excess and not contributory insurance required hereunder;

26.2.2 Stating that no reduction, cancellation or expiration of the policy shall be effective until thirty (30) days from the date notice thereof is actually received by Buyer; provided, that upon Supplier's receipt of any notice of reduction, cancellation or expiration, Supplier shall immediately provide notice thereof to Buyer;

26.2.3 Providing Buyer with subrogation waivers on all coverage;

26.2.4 Providing for Separation of Insured coverage in the general liability and auto liability insurance policies; and

26.2.5 Naming Buyer as an additional insured on the general liability and auto liability insurance policies of Supplier as its interests may appear with respect to this Agreement.

26.3 Certificates of Insurance. Within thirty (30) days of the Effective Date, Supplier shall provide to Buyer, and shall continue to provide to Buyer within thirty (30) days of each anniversary of the Effective Date until the expiration of this Agreement, upon any change in coverage, or at the request of Buyer not to exceed once each year, properly executed and current certificates of insurance with respect to all insurance policies required to be maintained by Supplier under this Agreement. Certificates of insurance shall provide the following information:

26.3.1 The name of insurance company, policy number and expiration date;

26.3.2 The coverage required and the limits on each, including the amount of deductibles or self-insured retentions, which shall be for the account of Supplier maintaining such policy; and

26.3.3 A statement indicating that Buyer shall receive at least thirty (30) days prior notice of cancellation or expiration of a policy or of a reduction of liability limits with respect to a policy.

26.4 Certified Copies of Insurance Policies. At Buyer's request, in addition to the foregoing certifications, Supplier shall deliver to Buyer a copy of each insurance policy, certified as a true copy by an authorized representative of the issuing insurance company.

26.5 Inspection of Insurance Policies. Buyer shall have the right to inspect the original policies of insurance applicable to this Agreement at Supplier's place of business during regular business hours.

26.6 Supplier's Minimum Insurance Requirements.

26.6.1 Worker's Compensation. Workers' compensation insurance in the form and manner required by statutory requirements and endorsement providing insurance for obligations under the U.S. Longshoremen's and Harbor Worker's Compensation Act and the Jones Act where applicable. Employer's liability insurance with the following limits: (1) one million dollars ($1,000,000.00) per each bodily injury by accident; (2) one million dollars ($1,000,000.00) per each employee bodily injury by occupational disease; and (3) one million dollars ($1,000,000.00) in the annual aggregate per each bodily injury by occupational disease.

26.6.2 General Liability. General liability insurance including bodily injury, property damage, products/completed operations, contractual and personal injury liability with a combined single limit of at least five million dollars ($5,000,000) per occurrence and at least five million dollars ($5,000,000) annual aggregate.

26.6.3 Automobile Liability. Automobile liability insurance including owned, non-owned and hired automobiles with combined bodily injury and property damage with a combined single limit of at least two million dollars ($2,000,000).

26.6.4 Failure to Comply. If Supplier fails to comply with the provisions of this Article 26, Supplier shall save harmless and indemnify Buyer from any direct or indirect loss and liability, including attorneys' fees and other costs of litigation, resulting from the injury or death of any person or damage to any property if Buyer would have been protected had Supplier complied with the requirements of this Article 26, in accordance with the indemnification provisions of Article 17.

27. NO EXPECTATION OF CONFIDENTIALITY; PUBLIC STATEMENTS

27.1 No Expectation of Confidentiality. Supplier has no expectation that any of the terms of this Agreement will be treated as confidential by Buyer, and Buyer has no obligation to seek confidential treatment of this Agreement in connection with Buyer's Regulatory Approvals or otherwise.

27.2 Public Statements. The Parties shall consult with each other prior to issuing any public announcement, statement or other disclosure with respect to this Agreement and Supplier shall not issue any such public announcement, statement or other disclosure without having first received the written consent of Buyer (which may not be unreasonably withheld or delayed), except as may be required by Law. Notwithstanding the foregoing, Supplier acknowledges and agrees that Buyer may advertise, issue brochures or make other announcements, publications or releases regarding this Agreement and the Generating Facility for educational, promotional or informational purposes. Supplier shall reasonably cooperate with Buyer regarding such activities, including providing Buyer with reasonable access to the Generating Facility and authorizing the use of pictures of the Generating Facility for such activities. It shall not be deemed a violation of this Section 27.2 to file this Agreement with the PUCN or FERC or any other Governmental Authority in connection with Buyer's Regulatory Approvals or otherwise.

28. MISCELLANEOUS

28.1 Notices.

28.1.1 All notices hereunder shall, unless expressly specified otherwise, be in writing and shall be addressed, except as otherwise stated herein, to the Parties' Contract Representatives as set forth in Exhibit 4 or as modified from time to time by the receiving Party by notice to the other Party. Any changes to Exhibit 4 shall not constitute an amendment to this Agreement.

28.1.2 All notices or submittals required by this Agreement shall be sent either by regular first class U.S. mail, registered or certified U.S. mail postage paid return receipt requested, overnight courier delivery, or electronic mail. Such notices or submittals will be effective upon receipt by the addressee, except that notices or submittals transmitted by electronic mail shall be deemed to have been validly and effectively given on the day (if a Business Day and, if not, on the next following Business Day) on which it is transmitted if transmitted before 1600 PPT, and if transmitted after that time, on the following Business Day. If any notice or submittal sent by regular first class U.S. mail, registered or certified U.S. mail postage paid return receipt requested, overnight courier delivery is tendered to an addressee and the delivery thereof is refused by such addressee, such notice shall be effective upon such tender. All oral notifications required under this Agreement shall be made to the receiving Party's Contract Representative or Operating Representative (as applicable) and shall promptly be followed by notice as provided in the other provisions of this Section 28.1.

28.1.3 Notices of Force Majeure or an Event of Default pursuant to Article 19 or pursuant to Article 23, respectively, and notices of a change to Exhibit 4 shall be sent either by registered or certified U.S. mail (postage paid return receipt requested), or overnight courier delivery, or electronic mail. If any such notice is sent via electronic mail or facsimile transmission, then a

copy of such notice shall also be sent either by registered or certified U.S. mail (postage paid return receipt requested), or overnight courier delivery. Such notices or submittals will be effective upon receipt by the addressee; except that notices or submittals transmitted by electronic mail shall be deemed to have been validly and effectively given on the day (if a Business Day and, if not, on the next following Business Day) on which it is transmitted if transmitted before 1600 PPT, and if transmitted after that time, on the following Business Day. If any notice sent by regular first class U.S. mail, registered or certified U.S. mail postage paid return receipt requested, overnight courier delivery is tendered to an addressee and the delivery thereof is refused by such addressee, such notice shall be effective upon such tender.

28.1.4 Any payments required to be made under this Agreement shall be made pursuant to the instructions in Exhibit 4, as such instructions may be changed by any Party from time to time by notice.

28.2 Merger. This Agreement contains the entire agreement and understanding between the Parties with respect to all of the subject matter contained herein, thereby merging and superseding all prior agreements and representations by the Parties with respect to such subject matter.

28.3 Counterparts. This Agreement may be executed in two (2) counterparts, both of which shall be deemed an original.

28.4 Interpretation. In the event an ambiguity or question of intent or interpretation arises, this Agreement shall be construed as if drafted jointly by the Parties and no presumption or burden of proof shall arise favoring or disfavoring any Party by virtue of authorship of any of the provisions of this Agreement. Any reference to any federal, state, local, or foreign statute or law shall be deemed also to refer to all rules and regulations promulgated thereunder, unless the context requires otherwise. The words "include," "includes" and "including" in this Agreement shall not be limiting and shall be deemed in all instances to be followed by the phrase "without limitation". References to Articles and Sections herein are cross-references to Articles and Sections, respectively, in this Agreement, unless otherwise stated.

28.5 Headings and Titles. The headings or section titles contained in this Agreement are inserted solely for convenience and do not constitute a part of this Agreement between the Parties, nor should they be used to aid in any manner in the construction of this Agreement.

28.6 Discontinued or Modified Index. If the Dow Jones & Company discontinues publishing or substantially modifies any index utilized herein, then the index used herein will be modified to the most appropriate available index, with appropriate changes to take into account any changes in the location of measurement.

28.7 Severability. If any term, provision or condition of this Agreement is held to be invalid, void or unenforceable by a Governmental Authority and such holding is subject to no further appeal or judicial review, then such invalid, void, or unenforceable term, provision or condition shall be deemed severed from this Agreement and all remaining terms, provisions and conditions of this Agreement shall continue in full force and effect. The Parties shall endeavor in good faith to replace such invalid, void or unenforceable provisions with valid and enforceable provisions which achieve the purpose intended by the Parties to the greatest extent permitted by law.

28.8 Waivers; Remedies Cumulative. No failure or delay on the part of a Party in exercising any of its rights under this Agreement or in insisting upon strict performance of provisions of this Agreement, no partial exercise by either Party of any of its rights under this Agreement, and no course of dealing between the Parties shall constitute a waiver of the rights of either Party under this Agreement. Any waiver shall be effective only by a written instrument signed by the Party granting such waiver, and such shall not operate as a waiver of, or estoppel with respect to, any subsequent failure to comply therewith. The remedies provided in this Agreement are cumulative and not exclusive of any remedies provided by law.

28.9 Amendments. Amendments to this Agreement shall be mutually agreed upon by the Parties, produced in writing and shall be executed by an authorized representative of each Party. To the extent necessary or desirable, Buyer may submit amendment(s) to the PUCN and FERC, as applicable, for filing, acceptance or approval, and, to the extent required, PUCN approval shall be a condition precedent to the effectiveness of any such amendment.

28.10 Time is of the Essence. Time is of the essence to this Agreement and in the performance of all of the covenants, obligations and conditions hereof.

28.11 Choice of Law. This Agreement and the rights and obligations of the Parties shall be construed and governed by the Laws of the State of Nevada.

28.12 Further Assurances. The Parties hereto agree to execute and deliver promptly, at the expense of the Party requesting such action, any and all other and further instruments, documents and information which a Party may request and which are reasonably necessary or appropriate to give full force and effect to the terms and intent of this Agreement. Without limitation of the foregoing, whenever revised or updated exhibits are delivered or generated hereunder for attachment to this Agreement, the Parties will memorialize in a reasonable written instrument, to be executed and delivered by both Parties, that such revised or updated exhibits are to be attached to this Agreement in lieu of the previous version of such exhibits; provided, however, that no failure to obtain such a mutually executed and delivered instrument will impair the effectiveness of any such revised or updated exhibit if it has been properly prepared, and such revisions or updates are properly provided for, in accordance with the terms and provisions of this Agreement.

28.13 Forward Contract. The Parties acknowledge and agree that this Agreement and the transactions contemplated hereunder constitute a "forward contract" within the meaning of the United States Bankruptcy Code.

28.14 No Third-Party Beneficiaries. Nothing in this Agreement nor any action taken hereunder shall be construed to create any duty, liability or standard of care to any third party, no third party shall have any rights or interest, direct or indirect, in this Agreement or the services to be provided hereunder, and this Agreement is intended solely for the benefit of the Parties, and the Parties expressly disclaim any intent to create any rights in any third party as a third-party beneficiary to this Agreement or the services to be provided hereunder.

28.15 Conflicts. The Parties acknowledge that Supplier has or will enter into an IA with the Transmission Provider. If Buyer is also the Transmission Provider and conflicts arise between any term, provision, or condition contained in this Agreement and the IA, Supplier shall comply with the most stringent requirement. If such conflict cannot be resolved by Supplier meeting the more stringent requirement, the Parties agree to work in good faith to resolve the conflict. If Buyer is not the Transmission Provider, the Parties shall perform their obligations under this Agreement as provided herein.

28.16 Mobile-Sierra. Absent agreement of all Parties to a proposed modification of this Agreement, the standard of review the FERC shall apply when acting on proposed modifications to this Agreement, either on FERC's own motion or on behalf of a signatory or a non-signatory, shall be the "public interest" application of the "just and reasonable" standard of review set forth in *United Gas Pipe Line Co. v. Mobile Gas Service Corp.*, 350 U.S. 332 (1956) and *Federal Power Commission v. Sierra Pacific Power Co.*, 350 U.S. 348 (1956) and clarified by *Morgan Stanley Capital Group, Inc. v. Public Util. Dist. No. 1 of Snohomish*, 554 U.S. ___, 128 S.Ct. 2733, 171 L.Ed.2d. 607 (2008) and *NRG Power Marketing, LLC v. Maine Pub. Util. Comm'n*, ___ U.S. ___ (2010).

28.17 **WAIVER OF JURY TRIAL. ANY CLAIM OR DISPUTE ARISING FROM OR RELATING TO THIS AGREEMENT SHALL BE DECIDED IN A COURT OF COMPETENT JURISDICTION AND, SUBJECT TO APPLICABLE LAW, THE PARTIES KNOWINGLY AND FREELY WAIVE ANY RIGHT THEY MAY HAVE TO A JURY TRIAL OF ANY CLAIM OR CAUSE OF ACTION BASED UPON OR ARISING OUT OF THIS AGREEMENT. THE PARTIES ACKNOWLEDGE AND REPRESENT THAT THE RIGHT TO A JURY TRIAL IS AN IMPORTANT RIGHT, THAT EACH HAS REVIEWED THIS WAIVER WITH LEGAL COUNSEL OF ITS OWN CHOOSING, OR HAS HAD AN OPPORTUNITY TO DO SO, THAT THIS PROVISION IS A MATERIAL AND NEGOTIATED TERM OF THIS AGREEMENT, AND THAT EACH PARTY WOULD NOT ENTER INTO THIS AGREEMENT BUT FOR THE JURY TRIAL WAIVER.**

IN WITNESS WHEREOF, the Parties hereto have caused this Agreement to be executed by their duly authorized representative as of the Effective Date.

BUYER:	**SUPPLIER:**
NEVADA POWER COMPANY	**FRV SPECTRUM SOLAR, LLC**
By: _____	By: _____
Name:	Name: Jose Benjumea
Title:	Title: President

EXHIBIT 1

DESCRIPTION OF GENERATING FACILITY

1. Name of Facility: FRV Spectrum Solar

   (a) Location: Lake Mead Blvd, Clark County, NV
   Approximate longitude/latitude coordinates: 36°13'59.24'''N, -114°52'45.26'''W

   (b) Delivery Point: 69kV Pabco Substation

2. Supplier: FRV Spectrum Solar, LLC

3. Parent: Fotowatio Renewable Ventures, Inc (FRV)

4. Operator: FRV Spectrum Solar, LLC

5. Equipment:

   (a) Type of Facility: Solar PV

   (b) Capacity:

      (i) Total nameplate capacity: 37.5 MW DC

      (ii) Total gross output capacity: 30.0 MW AC

      (iii) Total capacity net of Station Usage: 29.9 MW AC

   (c) Additional Technology Specific Information:

      (i) Siemens SINVERT 1000kW inverters

      (ii) _____

   (d) Number of generating units: 138,889 solar PV panels

   (e) Nameplate of each generating unit: 270 watts

EXHIBIT 2A

PRODUCT RATES

INTRODUCTORY PRODUCT RATE

If Supplier has elected to apply the Introductory Period, then the Product Rate paid for all Product delivered during the Introductory Period will be 90% of the Initial Product Rate or Product Rate applicable at such time ("Introductory Product Rate"); provided that Excess Product delivered during the Introductory Period will be paid at the Excess Product Rate.

PRODUCT RATE

The Product Rate shall be $121.75 per MWh ("Initial Product Rate") during the Stub Period (or, if there is no Stub Period because the Commercial Operation Date is January 1st, during the first Contract Year).

Thereafter, for the Term of the Agreement, the Product Rate shall be increased on January 1st of each Contract Year by an amount equal to one percent (1%) of the Product Rate for the previous Contract Year; (except that, solely with respect to the January 1st immediately following the Stub Period, such percentage shall be prorated as determined by the following formula:

Product Rate = Initial Product Rate * [1 + (0.01 * FCM/12)];

where FCM is the number of full calendar months between the Commercial Operation Date and December 31st (the Initial Product Rate, as so adjusted, referred to herein as the "Product Rate").

EXCESS PRODUCT RATE

The Excess Product Rate for the Term shall be $50.00 per MWh.

EXHIBIT 2B

FORM OF MONTHLY ENERGY INVOICE

Supplier Letterhead

Generating Facility: ____
Generating Facility ID: ____

Date: _____
Invoice Number: _____
Billing Period: _____

MONTHLY BILLING CALCULATIONS

Product Payments		**Rates/kWh**	**Totals**
- Excess Energy	kWh	$	$
- Maximum Energy	kWh	$	$
Product	kWh	- $	**$**

TOTAL AMOUNT DUE: **$ -**

MEASUREMENT PERIOD BILLING CALCULATIONS

PPA SUPPLY AMOUNT

Supply Amount	
+ Monthly Off-Peak	
+ Monthly On-Peak	
TOTAL	

SAM GENERATION SUPPLY AMOUNT

Supply Amount	**kWh**
+ Monthly Off-Peak	
+ Monthly On-Peak	
TOTAL	

SUPPLY AMOUNT - LESSER OF PPA OR SAM

+ Monthly Off-Peak	kWh
+ Monthly On-Peak	kWh
TOTAL	kWh
Excused Product	
- Planned Outages	kWh
- Force Majeure	kWh
Buyer Declared	
- Emergencies	kWh
- Curtailed Product	kWh
Total Adjusted Supply Amount	-
Performance Factor	%
Excess Energy Trigger	%
Maximum Amount Trigger (MW)	

MEASUREMENT PERIOD DELIVERED AMOUNT

+ Off-Peak Excess Threshold	kWh
+ On-Peak Excess	kWh
+ Max Off-Peak	kWh
+ Max On-Peak	kWh
+ Product	kWh
Total Delivered	
- Off-Peak Excess	kWh
Total Adjusted Delivered	

SHORTFALL

EXHIBIT 2B

FORM OF MONTHLY ENERGY INVOICE

CALCULATION

Performance Factor	**%**
Total Adjusted Supply Amount	**kWh**
Total Adjusted Delivered Amount	**kWh**
Shortfall Triggered	[Yes]/[No]
Replacement Cost	$ -

MEASUREMENT PERIOD INVOICE CALCULATION

Product Payments		**Rates/kWH**	**Totals**
Excess Energy	kWh	$	$
Maximum Energy	kWh	$	$
Product	kWh	$	**$**
LESS:			
Shortfall (if Any)	kWh	$	**$**
		TOTAL AMOUNT DUE:	**$ -**

PAYMENT DUE NO LATER THAN: Due Date

EXHIBIT 2B

FORM OF MONTHLY ENERGY INVOICE DETAIL

Supplier Letterhead

Date	Hour Ending	kWh	Supply Amount	Base Product Amount	Product Rate	Base Product Cost	Excess Energy	Excess Energy Rate	Excess Energy Cost	Maximum Amount Energy	Curtailed Product Amount	Curtailed Product Rate	Curtailed Product Cost	Shortfall	Reasons for Shortfall & Comments	Shortfall Excused (Yes/No)	Measurement Period Index Rate	Replacement Costs
Totals:																		

*The Monthly Energy Invoice Detail is the second component of Exhibit 2B and is to be attached to the Monthly Energy Invoice. It is to detail the supply of energy for each hour using the fields shown above.

EXHIBIT 2C

FORM OF PC REPLACEMENT INVOICE

Buyer Letterhead

Generating Facility:
Generating Facility ID:

Date: _____
Invoice Number: _____
Contract Year: _____
Payment Due Date: _____

ANNUAL PC AMOUNT

Contract Year Data	**Hours**	**Yearly PC Amount (kWh)**
Yearly PPA PC Amount		kWh
Yearly SAM PC Amount		kWh
Lesser of PPA or SAM PC Amount		kWh
Less Excused Adjustments:		
Planned Outages		kWh
Force Majeure		kWh
Buyer Declared Emergencies		kWh
Curtailed Product		kWh
Annual Adjusted PC Amount		

PC'S DELIVERED

Contract Year Data	**Hours**	**Yearly PC Amount (kWh)**
PC's Delivered (Gross Metered Data)		kWh

PC SHORTFALL CALCULATION

PC Shortfall Trigger (%)	%
Annual Adjusted PC Amount	kWh
PC Shortfall Trigger (kwh)	kWh
PC's Delivered	kWh
PC Shortfall	Yes / No

PC REPLACEMENT CALCULATION

PC Replacement Cost	$
PC Shortfall	kWh
TOTAL REPLACEMENT COSTS	**$**

EXHIBIT 3A

DESCRIPTION OF PROJECT SITE

LEGAL DESCRIPTION OF ALTA/ACSM LAND TITLE SURVEY

THE FOLLOWING METES AND BOUNDS LEGAL DESCRIPTION IS PROVIDED TO DESCRIBE THE LIMITS OF THIS SURVEY. THE CERTIFYING SURVEYOR MAKES NO CLAIMS THAT THE PROPERTY AS SHOWN HEREON IS A LEGAL LOT.

THAT PORTION OF SECTION 6, TOWSHIP 20 SOUTH, RANGE 64 EAST, M.D.M., CLARK COUNTY, NEVADA, DESCRIBED AS FOLLOWS:

COMMENCING AT THE SOUTHWEST CORNER OF SAID SECTION 6 MARKED BY A US GLO BRASS CAP DATED 1938; THENCE NORTH 90°00'00" EAST ALONG THE SOUTH LINE OF SAID SECTION 6, A DISTANCE OF 954.96 FEET; THENCE NORTH 00°00'00" EAST DEPARTING SAID SOUTH LINE A DISTANCE OF 55.92 FEET TO THE **POINT OF BEGINNING:**

THENCE CONTINUING NORTH 00°00'00" EAST, 3781.81 FEET;
THENCE NORTH 77°45'07" EAST, 1651.31 FEET;
THENCE NORTH 90°00'00" EAST, 653.91 FEET;
THENCE SOUTH 69°19'46" EAST, 1216.77 FEET;
THENCE SOUTH 00°00'00" EAST, 3702.62 FEET;
THENCE NORTH 90°00'00" WEST, 3406.07 FEET TO THE **POINT OF BEGINNING.**

CONTAINING 311.00 ACRES MORE OR LESS

EXHIBIT 3B

EXECUTION VERSION

MAP DEPICTING PROJECT SITE

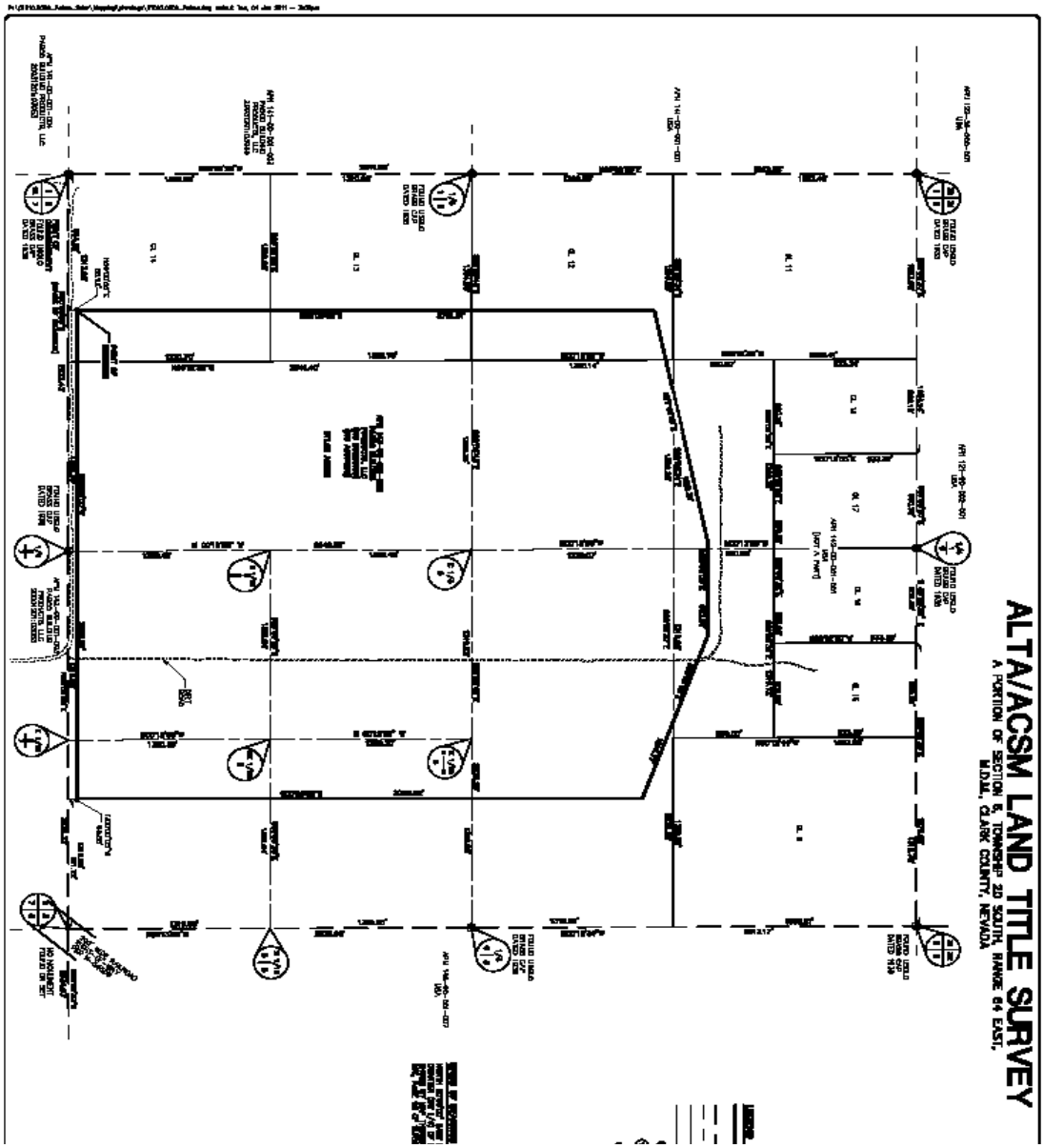

(See ALTA Survey provided by Supplier to Buyer)

EXHIBIT 4

EXECUTION VERSION

NOTICES, BILLING AND PAYMENT INSTRUCTIONS

SUPPLIER:

FRV Spectrum Solar, LLC

Contact	Mailing Address	Phone	E-mail
Contract Representative: Michael Lichtenfeld, Director	44 Montgomery St Suite 2200, San Francisco, CA 94104	415-229-8867	Michael.lichtenfeld@frv.com
Peter Conklin, Vice President		415-229-8866	Peter.conklin@frv.com
Steve Holman, General Counsel		415-229-8870	Steve.holman@frv.com
Operating Representative: David Fernandez, Sr. Vice President		415-229-8807	David.fernandez@frv.com
Operating Notifications: Prescheduling Real-Time Monthly Checkout			
Invoices: Accounts Payable		415-229-8824	Payables.sf@frv.com

PAYMENT INSTRUCTIONS *[To be provided prior to Commercial Operation Date]*

Payment by Check:
Name and/or Title/Department
Address [inc. Mail/Suite #s]
City, ST & Zip

OR

Payment by Wire Transfer:
Bank Name
Bank Address
Bank City, ST & Zip
Account Name [usually Supplier Name/reference]
ABA
Account Number
Reference

EXHIBIT 4

EXECUTION VERSION

NOTICES, BILLING AND PAYMENT INSTRUCTIONS

BUYER:

NEVADA POWER COMPANY

Contact	Mailing Address	Phone	E-mail
Contract Representatives			
Prior to Commercial Operation Date Manager, Renewable Energy Procurement	P.O. Box 98910, M/S 13 Las Vegas, NV 89151 *Physical Delivery Address:* 6226 W Sahara Ave, MS 13 Las Vegas, NV 89146	702/402-5336	bdoble@nvenergy.com
From and after Commercial Operation Date Manager, Contract Administration	P.O. Box 98910, M/S 26A Las Vegas, NV 89151 *Physical Delivery Address:* 6226 W Sahara Ave, MS 26A Las Vegas, NV 89146	702/402-5667	ContractAdmin_Renewables@nevp.com
Operating Representatives			
Scheduling			
Short-term Analysis		702/402-5864	ST_Analysis@sppc.com
Generation Dispatch		775/834-5143	Generation_Dispatch@nevp.com
Emergencies (including Force Majeure)			
Grid Reliability		775/834-4541	Grid_Reliability@sppc.com
Transmission – NPC		702/402-7107	Transmission@nevp.com
Transmission – SPPC		775/834-4541	Transmission@sppc.com
Short-term Analysis		702/402-5864	ST_Analysis@sppc.com
Planned Outages – NPC		702/402-7107	Planned_Outages@nevp.com
Planned Outages – SPPC		775/834/4716	Planned_Outages@sppc.com
Metering - NPC		702/402-4160	NPCMeterOps@nevp.com
Metering - SPPC		775/834-4406	Metering@sppc.com
Invoices			
Renewables Contracts Accountant	c/o NV Energy 6100 Neil Road, MS S2A20 Reno, NV 89511	775/834-4122	Invoicing@sppc.com
CC all invoices to:			
Renewables Contracts Agent	P.O. Box 98910, M/S 26A Las Vegas, NV 89151 *Physical Delivery Address:* 6226 W Sahara Ave, MS 26A Las Vegas, NV 89146	702/402-2476	ContractAdmin_Renewables@nevp.com
CC all "Event of Default," "Commercial Operation Date" and "Force Majeure" notices to:			
Legal	P.O. Box 98910, M/S 3A Las Vegas, NV 89151 *Physical Delivery Address:* 6226 W Sahara Ave, MS 3A Las Vegas, NV 89146	702/402-5267	mwarden@nvenergy.com

EXHIBIT 5

ONE-LINE DIAGRAM OF GENERATING FACILITY AND INTERCONNECTION FACILITIES

See attached one-line diagram of the Generating Facility, which indicates the Interconnection Facilities, the Delivery Point(s), ownership and the location of Meters. In accordance with Section 8.1, if agreed to by Buyer, in its sole discretion, Supplier may provide an update to Exhibit 5.

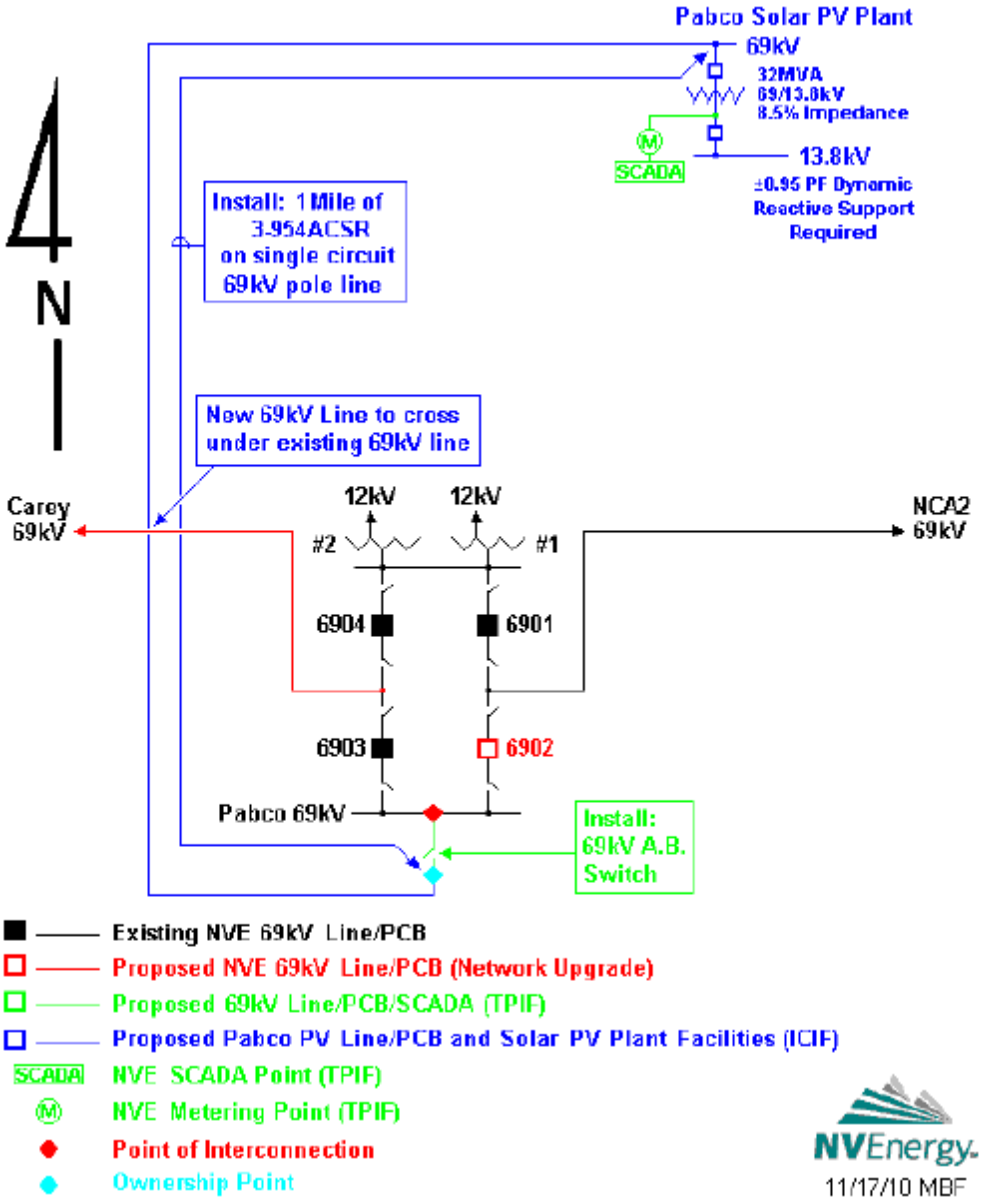

EXHIBIT 6

PROJECT MILESTONE SCHEDULE

1. All time periods are in months after the PUCN Approval Date. As stated below for convenience of drafting after PUCN approval will be shown as "AA". Any other timing is as otherwise described in specific items below. Buyer will update this Exhibit 6 with actual dates after PUCN approval is received.

2. All milestones may be completed earlier than stated times, at the sole option of Supplier.

A) Project Milestone: Supplier shall have **executed the IA**.

Completion Date: 6 months AA.

Documentation: Supplier shall provide Buyer with a fully executed copy of the IA.

B) Project Milestone: Supplier shall obtain all permits, licenses, easements and approvals to **construct** the Generating Facility, including UEPA permit.

Completion Date: 6 months AA.

Documentation: Supplier shall provide Buyer with an officer's certificate from the Persons certifying that permits, licenses, easements and approvals as listed in Exhibit 11 have been obtained, together with the metering system design for the Generating Facility (submitted for the Buyer's approval in accordance with Section 7.1.1) and a completed version of Exhibit 14.

C) Project Milestone: Supplier's **major equipment shall be delivered** to Generating Facility's construction site

Completion Date: 11 months AA.

Documentation: Supplier shall provide Buyer with documentation that the major equipment has been delivered to the Generating Facility's construction site

D) Project Milestone: Supplier shall obtain all permits, licenses, easements and approvals to **operate** the Generating Facility, including UEPA permit and registration with PC Administrator.

Completion Date: 8 months AA.

Documentation: Supplier shall provide Buyer with an officer's certificate from the Persons certifying that permits, licenses, easements and approvals as listed in Exhibit 11 have been obtained, together with reasonable documentation evidencing registration with PC Administrator.

EXHIBIT 6

PROJECT MILESTONE SCHEDULE

E) Project Milestone: The Generating Facility achieves the **Operation Date**.

Completion Date: 14 months AA.

Documentation: Buyer's Meters shall record Energy being delivered from the Generating Facility to Buyer and the Generating Facility provides written notice to Buyer that the Generating Facility satisfies the definition of Operation Date in the Agreement

CRITICAL PROJECT MILESTONES:

F) Project Milestone: Supplier shall demonstrate to Buyer that it has complete **financing** for construction of the Generating Facility.

Completion Date: 11 months AA.

Documentation: Supplier shall provide Buyer with an officer's certificate from the Persons certifying that debt and equity financing arrangements have been executed for funding of 100% construction financing of the Generating Facility.

G) Project Milestone: **Notice to Proceed** has been issued to the construction contractor under the EPC Contract and **construction** of the Generating Facility has commenced.

Completion Date: 11 months AA.

Documentation: Supplier shall provide Buyer a copy of the executed Notice to Proceed acknowledged by the construction contractor and documentation from qualified professionals which indicates that physical work has begun on-site regarding the construction of the Generating Facility, as well as an ALTA Survey for the Project Site.

H) Project Milestone: The Generating Facility achieves the **Commercial Operation Date**.

Completion Date: 17 months AA.

Documentation: Supplier provides written notice to Buyer that the Generating Facility satisfies the definition of the Commercial Operation Date in the Agreement.

EXHIBIT 7

PERFORMANCE TESTS

1. Performance tests required by the EPC Contract necessary for Commercial Operation.

2. Performance tests required by the IA necessary to achieve energization (as defined in the IA).

3. Supplier's Independent Engineer's attestation that the system as constructed is capable of meeting Supplier's performance obligations under the Agreement.

EXHIBIT 8

FORM OF AVAILABILITY NOTICE

UNIT NAME	DATE	MEASURE	HE 01	HE 02	HE 03	HE 04	HE 05	HE 06	HE 07	HE 08	HE 09	HE 10	HE 11	HE 12	HE 13	HE 14	HE 15	HE 16	HE 17	HE 18	HE 19	HE 20	HE 21	HE 22	HE 23	HE 24
Facility Name	Day1	BASEMW	0	0	0	0	0	0	0	0	0	0	0	0	0	0	0	0	0	0	0	0	0	0	0	0
Facility Name	Day2	BASEMW	0	0	0	0	0	0	0	0	0	0	0	0	0	0	0	0	0	0	0	0	0	0	0	0
Facility Name	Day3	BASEMW	0	0	0	0	0	0	0	0	0	0	0	0	0	0	0	0	0	0	0	0	0	0	0	0
Facility Name	Day1	MAX CAPABILITY	0	0	0	0	0	0	0	0	0	0	0	0	0	0	0	0	0	0	0	0	0	0	0	0
Facility Name	Day2	MAX CAPABILITY	0	0	0	0	0	0	0	0	0	0	0	0	0	0	0	0	0	0	0	0	0	0	0	0
Facility Name	Day3	MAX CAPABILITY	0	0	0	0	0	0	0	0	0	0	0	0	0	0	0	0	0	0	0	0	0	0	0	0
Facility Name	Day1	MIN CAPABILITY	0	0	0	0	0	0	0	0	0	0	0	0	0	0	0	0	0	0	0	0	0	0	0	0
Facility Name	Day2	MIN CAPABILITY	0	0	0	0	0	0	0	0	0	0	0	0	0	0	0	0	0	0	0	0	0	0	0	0
Facility Name	Day3	MIN CAPABILITY	0	0	0	0	0	0	0	0	0	0	0	0	0	0	0	0	0	0	0	0	0	0	0	0
Facility Name	Day1	ON AGC	0	0	0	0	0	0	0	0	0	0	0	0	0	0	0	0	0	0	0	0	0	0	0	0
Facility Name	Day2	ON AGC	0	0	0	0	0	0	0	0	0	0	0	0	0	0	0	0	0	0	0	0	0	0	0	0
Facility Name	Day3	ON AGC	0	0	0	0	0	0	0	0	0	0	0	0	0	0	0	0	0	0	0	0	0	0	0	0

Note: Form of Availability Notice to be provided by Buyer to Supplier in Excel format.

EXHIBIT 8

FORM OF AVAILABILITY NOTICE

Date For Notice: 04/02/09

Supplier: Supplier XYZ

Name of Suppliers Representative: Supplier Rep name here

Buyer: NPC

Contact Info: Address here
City, State, Zip here
123-456-7890

Hour	Net Availability From Plant MWh	Total Derating MWh	Plant Total MWh	Cause and Time of Derating
1:00	0	0	0	
2:00	0	0	0	
3:00	0	0	0	
4:00	0	0	0	
5:00	0	0	0	
6:00	0	0	0	
7:00	0	0	0	
8:00	0	0	0	
9:00	0	0	0	
10:00	0	0	0	
11:00	0	0	0	
12:00	0	0	0	
13:00	0	0	0	
14:00	0	0	0	
15:00	0	0	0	
16:00	0	0	0	
17:00	0	0	0	
18:00	0	0	0	
19:00	0	0	0	
20:00	0	0	0	
21:00	0	0	0	
22:00	0	0	0	
23:00	0	0	0	
0:00	0	0	0	
Total	0	0	0	

Note: Initial Form of Availability Notice to be provided by Buyer in Excel format. Supplier to submit Form of Availability Notice in Excel format to Control Area Operator as identified in Exhibit 4 Notices. Form requires 7 days of availability.

EXHIBIT 9

BUYER'S REQUIRED REGULATORY APPROVALS

1. PUCN approval of this Agreement.

EXHIBIT 10

SUPPLIER'S REQUIRED REGULATORY APPROVALS

1. Renewable Energy System certification.

2. PUCN approval of this Agreement.

3. If the Generating Facility is an EWG: Notice of Self Certification as an EWG, or an order from FERC granting the Generating Facility EWG status, and FERC authorization under section 205 of the Federal Power Act to make sales from the Generating Facility.

4. If the Generating Facility is a QF: Notice of Self Certification as a QF or an order from FERC granting the Generating Facility QF status.

5. If the Generating Facility is a QF with a generating capacity greater than 20 MW: FERC authorization under section 205 of the Federal Power Act to make sales from the Generating Facility.

6. Clark County Use Permit

7. All other permits or approvals as required by applicable Law

EXHIBIT 11

SUPPLIER'S REQUIRED PERMITS FOR CONSTRUCTION AND OPERATION

Permit	Construction / Operation	Agency
Technical Drainage Study Approval	Construction	Clark County
Master Grading Plan Approval	Construction	Clark County
Use Permit	Operations	Clark County
MSHCP Payment and Approval	Construction	Clark County
Jurisdiction Waterways (404/401) or waiver	Construction	US Army Corps of Engineers

And all other permits or approvals as required by applicable Law after the Effective Date.

EXHIBIT 12

SUPPLIER'S REQUIRED AGREEMENTS

1. This Agreement.

2. The IA.

3. Lease Agreement with Landowner

EXHIBIT 13

EXECUTION VERSION

SUPPLY AMOUNT

The Supply Amount(s) shall be the Energy amounts for each Delivery Hour that shall be supplied by Supplier to Buyer, pursuant to this Agreement, as specified by each value in the attached table below.

Hours	Peak	JAN	FEB	MAR	APR	MAY	JUN	JUL	AUG	SEP	OCT	NOV	DEC
1	Off Peak (MWh)	0.0	0.0	0.0	0.0	0.0	0.0	0.0	0.0	0.0	0.0	0.0	0.0
2		0.0	0.0	0.0	0.0	0.0	0.0	0.0	0.0	0.0	0.0	0.0	0.0
3		0.0	0.0	0.0	0.0	0.0	0.0	0.0	0.0	0.0	0.0	0.0	0.0
4		0.0	0.0	0.0	0.0	0.0	0.0	0.0	0.0	0.0	0.0	0.0	0.0
5		0.0	0.0	0.0	0.0	0.1	0.5	0.1	0.0	0.0	0.0	0.0	0.0
6		0.0	0.0	0.1	2.1	5.8	7.7	5.1	2.7	0.9	0.0	0.0	0.0
7	On-Peak (MWh)	0.0	0.7	3.9	13.6	18.5	18.1	17.0	14.8	9.6	4.6	1.3	0.0
8		3.8	7.7	15.8	22.4	23.6	22.5	21.7	21.6	19.7	15.9	10.0	4.6
9		13.1	16.7	20.4	24.7	25.8	24.4	24.4	24.0	21.6	19.0	16.6	13.0
10		14.9	18.3	22.1	25.5	25.4	24.8	25.0	24.4	23.1	19.6	17.0	14.0
11		15.1	18.0	21.9	24.7	26.0	25.4	25.4	24.2	22.9	19.7	16.4	14.2
12		14.4	17.7	20.9	24.2	25.6	25.7	24.5	23.9	22.4	19.0	16.0	13.6
13		14.7	17.3	20.4	24.1	25.6	25.4	24.9	22.9	22.5	19.6	16.0	13.8
14		15.0	18.5	21.0	23.7	25.4	25.7	24.5	22.1	22.1	19.8	16.9	15.2
15		14.8	18.0	20.4	23.3	24.6	24.8	24.6	22.3	20.2	19.3	15.6	14.5
16		10.4	15.2	17.7	21.4	22.2	22.8	22.4	19.9	18.7	14.1	7.8	6.4
17		1.8	5.6	10.8	15.9	18.6	19.2	19.3	17.0	10.8	3.5	0.7	0.0
18		0.0	0.2	1.5	4.1	8.4	11.8	10.8	6.8	1.7	0.0	0.0	0.0
19		0.0	0.0	0.0	0.0	0.7	1.7	1.5	0.4	0.0	0.0	0.0	0.0
20		0.0	0.0	0.0	0.0	0.0	0.0	0.0	0.0	0.0	0.0	0.0	0.0
21		0.0	0.0	0.0	0.0	0.0	0.0	0.0	0.0	0.0	0.0	0.0	0.0
22		0.0	0.0	0.0	0.0	0.0	0.0	0.0	0.0	0.0	0.0	0.0	0.0
23	Off Peak (MWh)	0.0	0.0	0.0	0.0	0.0	0.0	0.0	0.0	0.0	0.0	0.0	0.0
24		0.0	0.0	0.0	0.0	0.0	0.0	0.0	0.0	0.0	0.0	0.0	0.0
DAILY TOTALS	OffPeak (MWh)	0.0	0.0	0.1	2.1	5.9	8.2	5.2	2.7	0.9	0.0	0.0	0.0
	OnPeak (MWh)	118.0	153.9	196.8	247.6	270.4	272.3	266.0	244.3	215.3	174.1	134.3	109.3
	Total (MWh)	**118.0**	**153.9**	**196.9**	**249.7**	**276.3**	**280.5**	**271.2**	**247.0**	**216.2**	**174.1**	**134.3**	**109.3**
MONTHLY TOTALS*	OffPeak [1] (MWh)	590.0	615.6	790.3	1,053.4	1,534.9	1,335.2	1,491.2	1,060.9	1,103.5	696.4	671.5	546.5
	OnPeak (MWh)	3,068.0	3,693.6	5,313.6	6,437.6	7,030.4	7,079.8	6,916.0	6,596.1	5,382.5	4,700.7	3,357.5	2,841.8
	Total (MWh)	**3,658.0**	**4,309.2**	**6,103.9**	**7,491.0**	**8,565.3**	**8,415.0**	**8,407.2**	**7,657.0**	**6,486.0**	**5,397.1**	**4,029.0**	**3,388.3**
ANNUAL	Total (MWh)	**73,907.0**											
	Average Supply Amount (MW)	**8.4**											
Hourly	Maximum Supply Amount	**30.0**											

[1] Monthly Off-Peak Totals must include Sundays and NERC holidays

EXHIBIT 14

DIAGRAM OF GENERATING FACILITY

In accordance with Section 8.1, Supplier shall provide (a) not later than the Supplier's completion of the Project Milestone relating to obtaining of construction permits, a completed version of Exhibit 14 and (b) within thirty (30) Business Days after the Commercial Operation Date, a revised version of Exhibit 14 reflecting the Generating Facility as built.

The diagram of the Generating Facility to be attached as Exhibit 14 will include a detailed solar panel and inverter layout, including size, type, location and electrical infrastructure

EXHIBIT 15

OPERATIONS AND MAINTENANCE AGREEMENT; OPERATOR GOOD STANDING CERTIFICATE

In accordance with Section 8.8, Supplier shall provide Exhibit 15 no later than ninety (90) days prior to the Commercial Operation Date.

EXHIBIT 16

GROUND LEASE; RIGHTS-OF-WAYS

In accordance with Section 8.9, Supplier shall provide Exhibit 16 no later than sixty (60) days prior to commencement of on-site development activities at the Generating Facility.

EXHIBIT 17

FORM OF LETTER OF CREDIT

DATE OF ISSUANCE:

BENEFICIARY:

Nevada Power Company
PO Box 98910, M/S 26A
Las Vegas, Nevada 89151-0001

Re: Irrevocable Transferable Standby Letter of Credit No. _____

Dear Madam or Sir:

We ("Issuing Bank") hereby establish our Irrevocable Transferable Standby Letter of Credit ("Letter of Credit") in favor of Nevada Power Company, a Nevada corporation ("Beneficiary") for the account of [Supplier], a [_____] ("Account Party"), for the aggregate amount not exceeding _____ United States Dollars ($_____), available to you at sight upon demand at our counters at [Location] on or before the expiration hereof against presentation to us of (a) a sight draft in the form of Exhibit A, completed in accordance with the instructions contained in such Exhibit A and executed by your officer, and (b) a certificate in the form of Exhibit B, completed in accordance with the instructions contained in such Exhibit B and executed by your officer.

This Letter of Credit shall become effective immediately upon issuance and shall expire at our counters in [Location] on one year from the date of issuance, but shall automatically extend without amendment for additional one-year periods from such expiration date and subsequent expiration dates, if you, as Beneficiary, and the Account Party have not received due notice of our intention not to renew ninety (90) days prior to any such expiration date. This Letter of Credit is subject to the following:

1. Capitalized terms used herein and not otherwise defined have the meanings given in that certain Long-Term Portfolio Energy Credit and Renewable Power Purchase Agreement, dated as of _____, 20__, between Beneficiary and Account Party (as the same may be amended, the "Agreement").

2. The amount which may be drawn by you under this Letter of Credit shall be automatically reduced by the amount of any drawings paid through the Issuing Bank referencing this Letter of Credit No. ____. Partial drawings are permitted hereunder.

3. We hereby agree with you that documents drawn under and in compliance with the terms of this Letter of Credit shall be duly honored upon presentation as specified.

4. This Letter of Credit is subject to (a) the Uniform Customs and Practice for Documentary Credits, 2007 Revision, International Chamber of Commerce Publication No. 600 (the "UCP"), except to the extent that the terms hereof are inconsistent with the provisions of the UCP, including but not limited to Articles 14(b) and 36 of the UCP, in which case the

EXHIBIT 17

FORM OF LETTER OF CREDIT

terms of this Letter of Credit shall govern, and (b) to the extent not inconsistent with the UCP, the laws of the State of ***New York***.

5. With respect to Article 14(b) of the UCP, a demand for payment under this Letter of Credit may be made only on a day, and during hours, in which the Issuing Bank is open for business (a "Business Day"). If we receive your demand for payment at such office at or prior to 12:00 P.M. Pacific Standard Time on any Business Day in strict conformity with the terms and conditions of this Letter of Credit, we will honor the same by making payment in accordance with your payment instructions on that same Business Day. If we receive your demand for payment at such office after 12:00 P.M. Pacific Standard Time on any Business Day in conformity with the terms and conditions of this Letter of Credit, we will honor the same by making payment in accordance with your payment instructions on the next Business Day.

6. With respect to Article 36 of the UCP, in the event of an Act of God, riot, civil commotion, insurrection, war or any other cause beyond our control that interrupts our business (collectively, an "Interruption Event") and causes the place for presentation of this Letter of Credit to be closed for business on the last day for presentation, the expiry date of this Letter of Credit will be automatically extended without amendment to a date thirty (30) calendar days after the place for presentation reopens for business.

7. This Letter of Credit may not be transferred without our consent and may not be amended, changed or modified without the express written consent of the Beneficiary, the Issuing Bank and the Account Party.

8. Communications with respect to this Letter of Credit shall be in writing and shall be addressed to us at the address of the Issuing Bank, and shall specifically refer to this Letter of Credit No. _____.

9. This Letter of Credit sets forth in full the terms of our undertaking. Reference in this Letter of Credit to other documents is for identification purposes only and such reference shall not modify or affect the terms hereof or cause such documents to be deemed incorporated herein.

[ISSUING BANK SIGNATURE]

EXHIBIT 17

FORM OF LETTER OF CREDIT

Exhibit A
To: Letter of Credit Dept.
No. *****

SIGHT DRAFT

[Insert date on or prior to expiration date]
[Issuing Bank],
As Issuing Bank
[Issuing Bank Address]

Attn: Letter of Credit Dept.

Re: Irrevocable Transferable Standby Letter of Credit No. *****

At Sight

Pay to Nevada Power Company in immediately available funds _____ Dollars ($_____), pursuant to Irrevocable Transferable Standby Letter of Credit No. ***** of [Issuing Bank].

[BENEFICIARY]

By:
Name:
Title:

EXHIBIT 17

FORM OF LETTER OF CREDIT

Exhibit B
to Letter of Credit
No. *****

[The certificate is to be on the letterhead of the Beneficiary]

[Date]
[Issuing Bank]
as Issuing Bank
[Issuing Bank Address]
Attn: Letter of Credit Dept.

Re: Irrevocable Transferable Standby Letter of Credit No. *****

Gentlemen:

This is a certificate presented in accordance with your Irrevocable Transferable Standby Letter of Credit No. [ ] held by us (the "Letter of Credit").

{Use one of the following conditions}

We hereby certify that Account Party has failed to achieve Commercial Operation by the Commercial Operation Deadline (or the extended Commercial Operation Deadline if applicable).

OR

We hereby certify that Account Party has failed to make a payment to Beneficiary owing under the Agreement, or to reimburse Beneficiary for costs, including Replacement Costs, PC Replacement Costs and Penalties, that the Beneficiary has incurred or may incur as a result of the Account Party's failure to perform under the Agreement, or that Account Party has failed to perform under the Agreement where such failure entitles Beneficiary to draw on the Letter of Credit pursuant to the terms of the Agreement.

OR

We hereby certify that the Letter of Credit has not been renewed or replaced at least thirty (30) days prior to its expiration date.

OR

We hereby certify that the credit rating of [Issuing Bank] has been downgraded to below the Minimum Credit Rating and a replacement letter of credit has not been issued in favor of Buyer within five (5) Business Days of such downgrade.

EXHIBIT 17

FORM OF LETTER OF CREDIT

IN WITNESS WHEREOF, this certificate has been executed and delivered by a duly authorized officer of the undersigned on the date first above written.

[BENEFICIARY]

By:

Name:
Title:

EXHIBIT 18

YEARLY PC AMOUNT

Yearly PC Amount	75,015,605

FIRST AMENDMENT TO THE
POWER PURCHASE AGREEMENT
BETWEEN NEVADA POWER COMPANY
AND FRV SPECTRUM SOLAR LLC

This First Amendment is made to the Long Term Firm Portfolio Energy Credit and Renewable Power Purchase Agreement (the "Agreement") by and between **FRV SPECTRUM SOLAR LLC**, a Delaware limited liability company ("Supplier"), and **NEVADA POWER COMPANY**, a Nevada corporation, d/b/a NV Energy ("Buyer"), dated [_____], 2011, and is entered into by and between Buyer and Supplier September [ ], 2011 ("Amendment Effective Date"). All initially capitalized terms used but not defined herein shall have the meaning given to them in the Agreement.

WHEREAS, the approval of the Agreement has not yet been obtained from the Public Utilities Commission of Nevada ("PUCN") as of the date hereof; and

WHEREAS Supplier has offered certain changes to the terms of the Agreement prior to a rehearing of the Agreement before the PUCN to improve its likelihood of approval.

NOW THEREFORE, for good and valuable consideration, the Parties agree to amend the Agreement as follows:

1. Change of Product Rate. The Initial Product Rate set forth in Exhibit 2A shall be amended by replacing "$121.75" in the first sentence of the second paragraph of Exhibit 2A with "$111.00" so that the Initial Product Rate for all purposes under the Agreement shall be $111.00.

2. Except as amended hereby, the Agreement remains in full force and affect and all other terms remain unchanged.

[Signature page follows]

IN WITNESS WHEREOF, the Parties agree to this First Amendment as of the date set forth above.

NEVADA POWER COMPANY
(d/b/a NV Energy)

By: _____

Name: _____

Title: _____

Date: _____

FRV SPECTRUM SOLAR LLC

By: RWReichenberger

Name: ROBERT REICHENBERGER

Title: VP-Utility

Date: 9/29/11

LEGAL DEPT.
Approved as to Form
Initials: DMD
Date: 9-29-11

REEEA Attachment 6: Nevada State Business License

STATE OF NEVADA

ROSS MILLER
Secretary of State

SCOTT W. ANDERSON
Deputy Secretary
for Commercial Recordings

OFFICE OF THE
SECRETARY OF STATE

Commercial Recordings Division
202 N. Carson Street
Carson City, NV 89701-4069
Telephone (775) 684-5708
Fax (775) 684-7138

DENISE GRAY
SUN EDISON LLC
12500 BALTIMORE AVE.
BELTSVILLE, MD 20705

Job:C20120131-0157
January 31, 2012

Special Handling Instructions:

Charges

Description	Document Number	Filing Date/Time	Qty	Price	Amount
Annual List	20120070090-21	1/31/2012 7:23:18 AM	1	$125.00	$125.00
Business License 1/2012-1/2013	20120070090-21	1/31/2012 7:23:18 AM	1	$200.00	$200.00
Total					$325.00

Payments

Type	Description	Amount
Credit	095494|12013127479499	$325.00
Total		$325.00

Credit Balance: $0.00

Job Contents:

File Stamped Copy(s):	1
Business License(s):	1

DENISE GRAY
SUN EDISON LLC
12500 BALTIMORE AVE.
BELTSVILLE, MD 20705

ANNUAL LIST OF MANAGERS OR MANAGING MEMBERS AND REGISTERED AGENT AND STATE BUSINESS LICENSE APPLICATION OF:

FILE NUMBER

FRV SPECTRUM SOLAR, LLC — E0004542011-5

NAME OF LIMITED-LIABILITY COMPANY

FOR THE FILING PERIOD OF 1/2012 TO 1/2013

110401

****YOU MAY FILE THIS FORM ONLINE AT www.nvsos.gov****

The entity's duly appointed registered agent in the State of Nevada upon whom process can be served is:

NATIONAL CORPORATE RESEARCH, LTD. (Commercial Registered Agent)
202 SOUTH MINNESOTA STREET
CARSON CITY, NV 89703 USA

A FORM TO CHANGE REGISTERED AGENT INFORMATION IS FOUND AT: www.nvsos.gov

Filed in the office of
Ross Miller
Secretary of State
State of Nevada

Document Number
20120070090-21
Filing Date and Time
01/31/2012 7:23 AM
Entity Number
E0004542011-5

(This document was filed electronically.)

ABOVE SPACE IS FOR OFFICE USE ONLY

USE BLACK INK ONLY - DO NOT HIGHLIGHT

☐ Return one file stamped copy. (If filing not accompanied by order instructions, file stamped copy will be sent to registered agent.)

IMPORTANT: Read instructions before completing and returning this form.

1. Print or type names and addresses, either residence or business, for all manager or managing members. A **Manager, or if none, a Managing Member** of the LLC must sign the form. *FORM WILL BE RETURNED IF UNSIGNED.*
2. If there are additional managers or managing members, attach a list of them to this form.
3. Annual list fee is $125.00. A $75.00 penalty must be added for failure to file this form by the deadline. An annual list received more than 90 days before its due date shall be deemed an amended list for the previous year.
4. State business license fee is $200.00. Effective 2/1/2010, $100.00 must be added for failure to file form by deadline.
5. Make your check payable to the Secretary of State.
6. **Ordering Copies:** If requested above, one file stamped copy will be returned at no additional charge. To receive a certified copy, enclose an additional $30.00 per certification. A **copy fee of $2.00 per page** is required for **each additional copy** generated when ordering 2 or more file stamped or certified copies. Appropriate instructions must accompany your order.
7. Return the completed form to: Secretary of State, 202 North Carson Street, Carson City, Nevada 89701-4201, (775) 684-5708.
8. Form must be in the possession of the Secretary of State on or before the last day of the month in which it is due. (Postmark date is not accepted as receipt date.) Forms received after due date will be returned for additional fees and penalties. Failure to include annual list and business license fees will result in rejection of filing.

ANNUAL LIST FILING FEE: $125.00 LATE PENALTY: $75.00 BUSINESS LICENSE FEE: $200.00 LATE PENALTY: $100.00

Complete only if applicable

☐ Pursuant to NRS, this corporation is exempt from the business license fee. Exemption code:

☐ Month and year your State Business License expires: 20

Section 7(2) Exemption Codes
001 - Governmental Entity
002 - 501(c) Nonprofit Entity
003 - Home-based Business
004 - Natural Person with 4 or less rental dwelling units
005 - Motion Picture Company
006 - NRS 680B.020 Insurance Co.

NAME: RV SOLAR PROJECT GP, LLC
(DOCUMENT WILL BE REJECTED IF TITLE NOT INDICATED) ☐ MANAGER ☑ MANAGING MEMBER
ADDRESS: 44 MONTGOMERY STREET, SUITE 2200 , USA | CITY: SAN FRANCISCO | STATE: CA | ZIP CODE: 94104

NAME:
(DOCUMENT WILL BE REJECTED IF TITLE NOT INDICATED) ☐ MANAGER ☐ MANAGING MEMBER
ADDRESS: | CITY: | STATE: | ZIP CODE:

NAME:
(DOCUMENT WILL BE REJECTED IF TITLE NOT INDICATED) ☐ MANAGER ☐ MANAGING MEMBER
ADDRESS: | CITY: | STATE: | ZIP CODE:

NAME:
(DOCUMENT WILL BE REJECTED IF TITLE NOT INDICATED) ☐ MANAGER ☐ MANAGING MEMBER
ADDRESS: | CITY: | STATE: | ZIP CODE:

I declare, to the best of my knowledge under penalty of perjury, that the above mentioned entity has complied with the provisions of sections 6 to 18 of AB 146 of the 2009 session of the Nevada Legislature and acknowledge that pursuant to NRS 239.330, it is a category C felony to knowingly offer any false or forged instrument for filing in the Office of the Secretary of State.

X KEVIN S LAPIDUS

Signature of Manager or Managing Member

Title: VICE PRESIDENT

Date: 1/31/2012 7:14:46 AM

SECRETARY OF STATE

STATE OF NEVADA

NEVADA STATE BUSINESS LICENSE

FRV SPECTRUM SOLAR, LLC

Nevada Business Identification # NV20111008729

Expiration Date: January 31, 2013

In accordance with Title 7 of Nevada Revised Statutes, pursuant to proper application duly filed and payment of appropriate prescribed fees, the above named is hereby granted a Nevada State Business License for business activities conducted within the State of Nevada.

This license shall be considered valid until the expiration date listed above unless suspended or revoked in accordance with Title 7 of Nevada Revised Statutes.

IN WITNESS WHEREOF, I have hereunto set my hand and affixed the Great Seal of State, at my office on January 31, 2012

ROSS MILLER
Secretary of State

This document is not transferable and is not issued in lieu of any locally-required business license, permit or registration.

Please Post in a Conspicuous Location

You may verify this Nevada State Business License online at www.nvsos.gov under the Nevada Business Search.